TOWNSHIP OF ANTRIM, FRANKLIN COUNTY
COMMONWEALTH OF PENNSYLVANIA
ORDINANCE NO. 338 OF 2014

AN ORDINANCE REPEALING CHAPTER 56 ENTITLED "BUILDINGS, NUMBERING OF" AND CHAPTER 122 ENTITLED "STREETS AND SIDEWALKS"; CREATING A NEW CHAPTER 124 ENTITLED "OFFICIAL MAP" AND REPEALING THE EXISTING CHAPTER 125 ENTITLED "SUBDIVISION AND LAND DEVELOPMENT" AND CHAPTER 150 ENTITLED "ZONING" AND REPLACING THEM WITH A NEW CHAPTER 125 ENTITLED "SUBDIVISION AND LAND DEVELOPMENT" AND A NEW CHAPTER 150 ENTITLED "ZONING"

WHEREAS, the Township of Antrim currently has building number regulations as set forth in Chapter 56 of the Code of the Township of Antrim, Pennsylvania; and

WHEREAS, the Township of Antrim currently has streets and sidewalk regulations as set forth in Chapter 122 of the Code of the Township of Antrim, Pennsylvania; and

WHEREAS, the Township of Antrim desires to repeal Chapters 56 and 122 of the code of the Township of Antrim, Pennsylvania; and

WHEREAS, the Township of Antrim desires to create Chapter 124 entitled "Official Map" and has authority to do so pursuant to the "Pennsylvania Municipalities Code" (53 P.S. § 10101 et seq.); and

WHEREAS, the Township of Antrim currently has subdivision and land development regulations as set forth in Chapter 125 of the Code of the Township of Antrim, Pennsylvania; and

WHEREAS, the Township of Antrim currently has zoning regulations as set forth in Chapter 150 of the Code of the Township of Antrim, Pennsylvania; and

WHEREAS, the Antrim Township Board of Supervisors desire to amend said Chapters 125 and 150 in order to promote the public health, safety and welfare of the residents of the Township.

NOW, THEREFORE, BE IT ENACTED AND ORDAINED, by the Board of Supervisors of the Township of Antrim pursuant to the "Pennsylvania Municipalities Code" (53 P.S. § 10101 et seq.) and the "Second Class Township Code" (53 P.S.§65101 et seq.) that the "Code of the Township of Antrim" is amended as follows:

SECTION 1 – Chapter 56 entitled "Building, Numbering of" shall be repealed in its entirety.

SECTION 2 – Chapter 122 entitled "Streets and Sidewalks" shall be repealed in its entirety.

SECTION 3 – Chapter 124 entitled "Official Map" shall be created and inserted into the Code of the Township of Antrim in numerical order. This newly created chapter shall read as follows:

§ 124-1 Purpose.
To identify areas of the Township to be improved, constructed, or preserved for the health safety and welfare of the Township. To give authority to the Board of Supervisors to negotiate with property owners and developers for such improvement, construction, or preservation.

§ 124-2 Word Usage.
Words used in the present tense include the future tense. The singular includes the plural. The word "person" includes an individual, a corporation, a partnership and incorporated association or any other similar entity. The word "lot" includes the words "plot" or "parcel." The term "shall" is always mandatory. The word "used" or "occupied" as applied to any land or building shall be construed to include the words "intended, arranged or designed to be used or occupied."

§ 124-3 Definitions.
ALTERATIONS - As applied to a building or structure, a change or rearrangement in the structural parts or in the existing facilities, or an enlargement, whether by extending on a side or by increasing height, or the moving from one location or position to another.
ALTERATIONS, STRUCTURAL - Any change in the supporting members of a building, such as bearing walls, columns, beams or girders.
APPLICATION FOR DEVELOPMENT - Every application, whether preliminary, tentative or final, required to be filed and approved prior to start of construction or development, including but not limited to an application for a building permit, for the approval of a subdivision plat or plan or for the approval of a development plan.
ARCHEOLOGICAL PROPERTY - A property that has any artifacts, remains, objects or any other evidence of historic or anthropological value located on the property, whether found above or below the surface of the earth.
BOARD – The Board of Supervisors of the Township of Antrim.
BUILDING - Any structure having a roof supported by columns or walls and intended for the shelter, housing or enclosure of persons, animals or chattels, and, including covered porches or bay windows and chimneys.
CONSTRUCTION - The construction, reconstruction, renovation, repair, extension, expansion, alteration or relocation of a building or structure, including the placement of mobile homes.
DEVELOPER - Any landowner, agent of such landowner or tenant with permission of such landowner, who makes or causes to be made a subdivision of land or land development
DEVELOPMENT - The disturbance of 5,000 sq. ft. or more of land resulting in any man-made change to improved or unimproved real estate, including but not limited to buildings or other structures, the placement of mobile homes, streets and other paving, utilities, filling, grading, excavation, mining, dredging or drilling operation, changes in the contour of the land and removal or destruction of topsoil, trees or other vegetative cover of the land.
EASEMENT, UTILITY - A right-of-way granted for limited use of land for public or quasi-public purpose.
GOVERNING BODY - The Board of Supervisors of Antrim Township, Franklin County, Pennsylvania.
HISTORICAL PROPERTY - A building, structure, object, district, place site or area significant in the history, architecture, maritime heritage or archaeology of the Township of Antrim, the Commonwealth of Pennsylvania or the United States of America.

HISTORICALLY SIGNIFICANT SITE OR STRUCTURE - A. Any site or structure in the National Register of Historic Places (a listing maintained by the Department of the Interior) or preliminarily determined by the Department of the Interior as meeting the requirements for individual listing on the National Register;
B. Certified or preliminary determination by the Secretary of the Interior as contributing to the historical significance of a registered historic district or a district preliminarily determined by the Secretary to qualify as a registered historic district;
C. Individually listed on a state inventory of historic places in states with historic preservation programs which have been approved by the Secretary of the Interior; or
D. Any other historic site or structure that is eligible for inclusion in a federal, state or local registry of historic sites or structures.
E. Any historic site or structure that the Township deems necessary for preservation.
IMPERVIOUS AREA - A surface that prevents the percolation into the ground (examples include but are not limited to stone/gravel materials, pavement, concrete, buildings, etc.)
LAND DEVELOPMENT - Any of the following activities:

A. The improvement of one lot or two or more contiguous lots, tracts or parcels of land for any purpose involving:
    1. A group of two or more residential or nonresidential buildings, whether proposed initially or cumulatively, or a single nonresidential building on a lot or lots regardless of the number of occupants or tenure.
    2. The division or allocation of land or space, whether initially or cumulatively, between or among two or more existing or prospective occupants by means of or for the purpose of streets, common areas, leaseholds, condominiums, building groups or other features.
B. A subdivision of land.
C. Development in accordance with this chapter and the Pennsylvania Municipalities Planning Code, Act of 1968 and as reenacted and amended.
D. Paving for commercial or industrial use.
E. Paving of more than 12,000 square feet for residential use. Paving over concrete or bituminous surfaces which are already existing shall be excluded from Subsections C and D above and this Subsection E.
F. Any alteration of the existing topography on a single nonresidential lot, tract or parcel of land that alters the drainage characteristics of an adjoining land parcel(s) or publicly held right-of-way by increasing the rate of surface water runoff by more than 10%.
G. Any nonresidential development of land.
H. Interior changes that create any additional improvements as required by the Code, including but not limited to: additional parking, increased sewer/water flows, etc.
I. Land development does not include development which involves:
    1. The conversion of an existing single-family detached dwelling or single-family semidetached dwelling into not more than three residential units, unless such units are intended to be a condominium.
    2. The addition of an accessory building, including farm buildings, on a lot or lots subordinate to an existing principal building.
    3. The addition or conversion of buildings or rides within the confines of an enterprise which would be considered an amusement park. For the purposes of this subsection, an amusement park is defined as a tract or area used principally as a location for permanent amusement structures or rides. This exclusion shall not apply to newly acquired acreage

by an amusement park until initial plans for the expanded area have been approved by the proper authorities.

LANDOWNER - The legal or beneficial owner or owners of land, including the holder of an option or contract to purchase (whether or not such option or contract is subject to any conditions), or a lessee if he or she is authorized under the lease to exercise the rights of the landowner or other person having a proprietary interest in land.

LOT - A designated parcel, tract or area of land established by a plat or otherwise as permitted by law and to be used, developed or built upon as a unit.

MUNICIPAL AUTHORITY - A body politic and corporate created pursuant to the Act of May 2, 1945 (P.L. 382, No. 164), known as the "Municipalities Authority Act of 1945."

MUNICIPALITY - The Township of Antrim, Franklin County, Pennsylvania.

NEW CONSTRUCTION - Structures for which the start of construction commenced on or after April 24, 1981 and includes any subsequent improvements thereto.

PLANNING COMMISSION - The Planning Commission of Antrim Township

PUBLIC - Owned, operated or controlled by a government agency (federal, state or local).

PUBLIC GROUNDS - Includes:

A. Parks, playgrounds, trails, paths and other recreational areas and other public areas.

B. Sites for schools, sewage treatment, refuse disposal and other publicly owned or operated facilities.

C. Publicly owned or operated scenic and historic sites.

PUBLIC HEARING - A formal meeting held pursuant to public notice by the Board of Supervisors or Planning Commission, intended to inform and obtain public comment, prior to taking action in accordance with this chapter.

PUBLIC MEETING - A forum held pursuant to notice under the Act of July 3, 1986, (P.L. 388, No. 84), known as the "Sunshine Act," 65 P.S. § 271 et seq.

PUBLIC NOTICE - Notice published once a week for two consecutive weeks in a newspaper of general circulation in the Township. Such notice shall state the time and place of the hearing and the particular nature of the matter to be considered at the hearing. The first publication shall not be more than 30 days and the second publication shall not be less than seven days from the date of the hearing.

PUBLIC PARK – A recreational facility open to the public at no charge or a recreational facility or area owned by a public entity such as a municipality or state

RECREATIONAL FACILITIES - A business engaged in providing a place with activities for the purpose of enjoyment, pastime, retreat, athletics, or restorative commune with nature.

STRUCTURE - Any man-made object having an ascertainable stationary location on or in land or water, whether or not affixed to the land.

TOWNSHIP - The Township of Antrim, Franklin County, Pennsylvania

WATERCOURSE - A permanent stream, intermittent stream, river, brook, creek channel or ditch for water, whether natural or man-made.

§ 124-4 Official Map

The Official Map is a planning tool used in conjunction with the Comprehensive Plan, the Zoning Chapter, and the Land Development Chapter that identifies public grounds at approximate locations having been added without the benefit of a survey. The Official Map is hereby adopted and made a part of this chapter. The items listed in the "LEGEND" section of the Official Map constitute the streets, water courses, public lands and projected improvements of

the Official Map herein sometimes referred to as "public grounds". An official copy of said map, indicating the latest amendments, shall be kept up-to-date for the use and benefit of the public and shall be so displayed at the Antrim Township Municipal Building.

§ 124-5 Additions.
The following additions may be added to the Official Map.

A. Existing and proposed public streets, intersections, watercourses, and public grounds, including widening, narrowing's, extensions, diminuations, openings or closing of same.
B. Existing and proposed public parks, playgrounds and open space.
C. Pedestrian ways and easements.
D. Railroad and transit rights of way and easements.
E. Support facilities, easements and other properties held by public bodies.
F. Historical properties or structures.
G. Archeological sites.

§ 124-6 Procedures.

A. The owner of a property shall notify the Township in writing that they propose to build, subdivide, or perform other work on land that has been listed in the legend section on the Official Map.
B. The municipality has one (1) year from the receipt of written notification from the property owner to confirm its acquisition interest and begin negotiations to acquire the land.
C. Such acquisition can take the form of dedication by owner, purchase of land or easement by the municipality, negotiations with the owner/developer to make desired improvements, or eminent domain, at the discretion of the municipality.
D. The Board is not, in any way, required to make or negotiate to make such improvements.

§ 125-7 Municipalities Planning Code.

A. This Chapter hereby incorporates by reference sections 404, 405, 406, and 407 of the Pennsylvania Municipalities Planning Code (MPC) as if set forth in full hereunder.
B. If any provision of this Chapter conflict with the MPC then the provisions of the MPC shall control.

§ 124-8 Revisions.
Official Map revisions shall be adopted by Resolution of the Antrim Township Board of Supervisors.

§ 124- 9 Enforcement.
Failure to notify Antrim Township of any changes to a property noted to have been included in the official map shall be a violation of this Chapter. Such violation may result in condemnation.

SECTION 4 – Chapter 125 entitled "Subdivision and Land Development shall be repealed in its entirety and replaced with a new Chapter 125 entitled "Subdivision and Land Development" and shall read as follows:

ARTICLE I, General Provisions

§ 125-1. Purpose.
This chapter is enacted to ensure subdivided and developed land in Antrim Township is suitable for construction, human habitation and will ensure sustenance to future generations. To accomplish this, Subdivision and Land Development plans shall be submitted to the Township for review and approval and shall include adequate open space, safe traffic patterns that minimize congestion and integrate pedestrian traffic, recreational space, and minimal interruption of light and air. Subdivision and Land Development plans shall, at a minimum, address sedimentation, storm water management, utilities, infrastructure, proper distribution of population and conformance with Chapter 150, Zoning, in order to create conditions favorable to the health, safety, morals and general welfare of the residents of Antrim Township.

§ 125-2. Title.
This chapter may be cited as the "Antrim Township Subdivision and Land Development Ordinance (ATSALDO)."

§ 125-3. Interpretation; conflicts with other provisions.
The provisions of this chapter shall be held to be a minimum requirement to meet the above stated purposes. Where the provisions of this chapter impose greater restrictions than those of any statute, other ordinance or regulations, the provisions of this chapter shall prevail. Where the provisions of any statute, other ordinance or regulations impose greater restrictions than those of this chapter, the provisions of such statute, ordinance or regulations shall prevail.

§ 125-4. Compliance with zoning regulations.
Nothing contained in this chapter shall relieve the owner or developer from complying with the applicable provisions of Chapter 150, Zoning. It is the expressed intent of the Township that this chapter and Chapter 150, Zoning be mutually reinforcing and together foster the stated planning goals and objectives of the Township.

§ 125-5. Minimum lot area, setback and yard requirements.
Chapter 150, Zoning dictates the minimum area regulations for lot area, setbacks, and yard requirements. All subdivision and land development shall comply with the minimum area regulations. When multiple non-residential uses are proposed on a single tract or parcel of land under single ownership, the minimum area requirements for a single lot size shall be met. The non-residential uses shall not be sold separately unless and until the uses are separated by subdivision and each newly created development, lot, tract, or parcel complies with the minimum area regulations.

§ 125-6. Existing approved lots without road frontage.
A lot in a previously approved Subdivision without public roadway frontage may be used if a legally binding agreement is provided, subject to approval by the Township, whereby maintenance of a privately accessed easement, lane or right-of-way having a minimum width of twelve (12) feet is agreed to and affirmed by all parties who do not have public roadway frontage and use the private easement, lane or right-of-way for motor vehicle ingress and egress for access to a public roadway. A stand-alone existing approved lot with a minimum twelve (12) foot wide panhandle connecting to a public roadway as a part of the property shall also be permitted. Each

lot shall comply with all applicable water and sewer regulations prior to the issuance of a land use or building permit and also shall comply with all other applicable Township ordinances.

§ 125-7. Rules and regulations.
The Board of Supervisors may pass, by resolution at any time after enactment of this chapter, any rules and/or regulations it deems necessary to implement, effectuate, interpret, enforce, construe or apply to this chapter.

ARTICLE II – DEFINITIONS

§ 125-8 Word Usage.
As used in this chapter words in the singular include the plural, and those in the plural include the singular.

A. The word "person" includes corporation, unincorporated association and partnership, as well as an individual.
B. The word "building" includes the meaning of "structure" and shall be construed as if followed by the phrase "or part thereof."

§ 125-9 Definitions.
The following words as used in this chapter shall have the meanings indicated below:

APPLICATION FOR DEVELOPMENT - Every application, whether preliminary, tentative, or final, required to be filed and approved prior to start of construction or development, including but not limited to an application for a land use permit, for the approval of a subdivision plat or plan or for the approval of a development plan.
AS BUILT DRAWINGS - Scaled drawings prepared and sealed by a Pennsylvania licensed engineer or surveyor showing the actual location of improvements made to a property.
BLOCK - An area bounded by streets.
BOARD - Any body granted jurisdiction under a land use ordinance or under this chapter to render final adjudications.
CARTWAY - The portion of a street intended for vehicle use.
CERTIFICATION STATEMENT - A signed statement appended to a plan or other document whereby the signer verifies that to the best of their knowledge and belief said plan or document is true and correct and that the Township may rely upon the accuracy thereof.
CLEAR SIGHT DISTANCE - A line of unobstructed vision from a point 4 1/2 feet above the center line of a street to the farthest point on the top of an object four inches high on the same center line.
COMMON OPEN SPACE - A parcel or parcels of land or an area of water, or a combination of land and water within a development site, and designed and intended for the use or enjoyment of residents of a development, not including streets, off-street parking areas and areas set aside for public facilities.
CONSERVATION AREA, PRIMARY - Land defined as floodplains, wetland, and/or having a slope greater than 25%.
CONSERVATION EASEMENT - An area of land or water designated as being protected from development in perpetuity.

CONSERVATION EASEMENT AGREEMENT - A legally drafted and recorded agreement between a landowner and the Township in which the owner agrees to place certain restrictions over all or portions of his/her land in perpetuity to retain it in a predominately natural, scenic, agricultural or other open space conditions. Except for the specific restrictions contained in the easement document, the owner retains all other rights in the property. The easement stays with the land and is therefore legally binding on present and future owners.
COUNTY - Franklin County, Pennsylvania
CUL-DE-SAC - A street with access closed at one end with a vehicular turnaround at the closed end.
DECISION - Final adjudication of any board or other body granted jurisdiction under any land use ordinance, either by reason of the grant of exclusive jurisdiction or by reason of appeals from determinations. All decisions shall be appealed to the court of common pleas of the county and the judicial district wherein the municipality lies.
DETERMINATION - Final action by an officer, body, or agency charged with the administration of any land use ordinance or application there under except the following: the Zoning Hearing Board, or the Planning Commission, only if and to the extent the Planning Commission is charged with the final decision on preliminary or final plans under this chapter or planned residential development provisions. Determinations shall be appealable only the boards designated as having jurisdiction for such appeal.
DEVELOPER - Any landowner, agent of such landowner or tenant with the permission of such landowner, who makes or causes to be made a subdivision of land or land development.
DEVELOPMENT - The disturbance of 5,000 sq. ft. or more of land resulting in any man-made change to improved or unimproved real estate, including but not limited to buildings or other structures, the placement of mobile homes, streets and other paving, utilities, filling, grading, excavation, mining, dredging or drilling operation, changes in the contour of the land and removal or destruction of topsoil, trees or other vegetative cover of the land.
DEVELOPMENT PLAN - The provisions for development, including a planned residential development, a plat of subdivision, all covenants relating to use, location and bulk of buildings and other structures, intensity of use or density of development, streets, ways and parking facilities, common open space and public facilities. The phrase "provisions of development plan" when used in this chapter shall mean the written and graphic materials referred to in this definition.
DRAINAGE - The flow of water or liquid waste and the methods of directing such flow.
DRIP LINE - The drip line is the area directly located under the outer circumference of the tree branches.
DRIVEWAY - A surface, other than a street, which provides vehicular access from a public street to a building on a lot
DWELLING - A building or structure designed for living quarters for one or more families, including homes which are supported either by a foundation or by blocks or jacks or are otherwise permanently attached to the land, but not including hotels, rooming houses or other accommodations used for transient occupancy.
DWELLING UNIT - One or more rooms used for living and sleeping purposes and having a kitchen with fixed cooking facilities arranged for occupancy by one family or a single person.
EASEMENT - A right-of-way granted for limited use of land for public or quasi-public purposes.

ENGINEER, PROFESSIONAL - A person duly licensed as an engineer by the commonwealth of Pennsylvania.
ENGINEER, TOWNSHIP - The Township Engineer or any consultant designated by the Board of Supervisors to review a subdivision plan and perform the duties of engineer on behalf of the Township.
EROSION AND SEDIMENTATION CONTROL PLAN - A plan for the control of erosion and sediment prepared pursuant to the rules and regulations of the Franklin County Soil Conservation District and Pennsylvania Department of Environmental Protection.
FLOODPLAINS - A relatively flat or low land area which is subject to partial or complete inundation from an adjoining or nearby stream, river or watercourse; and/or any area subject to the unusual and rapid accumulation of surface waters from any source.
GREEN DESIGN - Preserving primary conservation areas and incorporating green space through landscaping and courtyards to generate an aesthetic and environmentally conscious atmosphere.
GREEN SPACE - An area growing plants of any type, which include but are not limited to grass, trees, flowers, etc.
HARDSHIP - Financial infeasibility or financial impracticability, without more, shall not be deemed a "hardship". A hardship must not have been created by the applicant but must be caused by the topographical features of the land proposed to be developed.
HISTORICALLY SIGNIFICANT SITE AND/OR STRUCTURE - An historically significant site or structure shall be defined as follows:

A. Any site or structure in the National Register of Historic Places (a listing maintained by the Department of the Interior) or preliminarily determined by the Department of the Interior as meeting the requirements for individual listing on the National Register;
B. Certified or preliminary determination by the Secretary of the Interior as contributing to the historical significance of a registered historic district or a district preliminary determined by the Secretary to qualify as a registered historic district;
C. Individually listed on a state inventory of historic places in states with historic preservation programs which have been approved by the Secretary of the Interior; or
D. Individually listed on a local inventory of historic places in communities with historic preservation programs that have been certified either:
    a. By an approved state program as determined by the Secretary of the Interior; or
    b. Directly by the Secretary of the Interior in states without approved programs.
E. The historic sites and structures as described in the ""Open Space Plan"" amendment to the Township of Antrim Comprehensive Plan.
F. Any other historic site or structure that is eligible for inclusion in a federal, state or local registry of historic sites or structures.
G. Any historic site or structure that the Township deems necessary for preservation.
H. Any site or structure identified as a historic site or structure on the official map of Antrim Township.

LAND DEVELOPMENT –

A. The improvement of one lot or two or more contiguous lots, tracts or parcels of land for any purpose involving:
    1. A group of two or more residential or nonresidential buildings, whether proposed initially or cumulatively, or a single nonresidential building on a lot or lots regardless of the number of occupants or tenure.

2. The division or allocation of land or space, whether initially or cumulatively, between or among two or more existing or prospective occupants by means of, or for the purpose of streets, common areas, leaseholds, condominiums, building groups or other features.

B. A subdivision of land.
C. Development in accordance with this chapter and the Pennsylvania Municipalities Planning Code, Act of 1968, and as reenacted and amended.
D. Paving for commercial or industrial use.
E. Paving of more than 12,000 square feet for residential use. Paving over concrete or bituminous surfaces which are already existing shall be excluded from Subsection C and D above and this Subsection E.
F. Any alteration of the existing topography on a single nonresidential lot, tract or parcel of land that alters the drainage characteristics of an adjoining land parcel(s) or publicly held right-of-way by increasing the rate of surface water runoff by more than 10%.
G. Any nonresidential development of land.
H. Interior changes that create any additional improvements as required by the Code, including but not limited to: additional parking, increased sewer/water flows, etc.
I. Land development does not include development which involves:
   1. The conversion of an existing single-family detached dwelling or single-family semidetached dwelling into not more than three residential units, unless such units are intended to be a condominium.
   2. The addition of an accessory building on a lot or lots subordinate to an existing principal building.
   3. Agricultural buildings under 10,000 square feet.
   4. The addition or conversion of buildings or rides within the confines of an enterprise, which would be considered an amusement park. For the purposes of this subsection, an amusement park is defined as a tract or area used principally as a location for permanent amusement structures or rides. This exclusion shall not apply to newly acquired acreage by an amusement park until initial plans for the expanded area have been approved by the proper authorities.

LAND OWNER - The legal or beneficial owner or owners of land, including the holder of an option or contract to purchase (whether or not such option or contract is subject to any condition), a lessee if he or she is authorized under the lease to exercise the rights of the landowner, or other person having a proprietary interest in the land.

LINE OF SIGHT - A visually unobstructed distance of four hundred twenty five (425) feet from a point measured 10' back from the edge of the intersecting cartway at an elevation of three and one half (3 1/2) feet above the road surface to a point in the center of the cartway of oncoming traffic at an elevation of three and one half (3 1/2) feet above the cartway surface.

LOT - A designated parcel, tract or area of land established by a plat or otherwise as permitted by law and to be used, developed or built upon as a unit.

LOT, PANHANDLE - A polygonal-shaped lot with the appearance of a "frying pan" or "flag and staff," in which the handle is most often used as the frontage on a public street. The "handle" shall be not less than 25 feet in width and the lot shall meet the other requirements as set forth in § 150-8(D) and other requirements as set forth in the ordinances of the Township.

LOT, THROUGH (DOUBLE FRONTAGE LOT) - A lot with road frontage along the front and rear yard.

MARKETING ANALYSIS - A careful study of an aggregate of functions involved in moving goods from producer to consumer to learn about its parts, what they do, and how they are related to each other.
MOBILE HOME - A transportable, single-family dwelling intended for permanent occupancy, contained in one unit or in two or more units designed to be joined into one integral unit capable of again being separated for repeated towing, which arrives at a site complete and ready for occupancy except for minor and incidental unpacking and assembly operations, and constructed so that it may be used without a permanent foundation. The term does not include park trailers, travel trailers, recreational or other similar vehicles.
MOBILE HOME LOT - A parcel of land in a mobile home park, improved with the necessary utility connections and other appurtenances necessary for the erection thereon of a single mobile home.
MOBILE HOME PARK - A parcel or contiguous parcels of land which has been so designated and improved that it contains two or more mobile home lots for the placement thereon of mobile homes.
MUNICIPAL AUTHORITY - A body politic and corporate created pursuant to the Act of May 2, 1945 (P.L. 382, No. 164), known as the "Municipalities Authority Act of 1945."
MUNICIPALITIES PLANNING CODE (MPC) - An Act of 1968, P.L. 805 No. 247 and subsequent reenactments and amendments by the State of Pennsylvania to empower counties and municipalities, individually or jointly, to plan their developments and to govern the same by zoning, subdivision and land development ordinances and additional tools.
NON-MOTORIZED - Any method of travel that does not involve a device propelled by an electric or combustion motor with the exception of electric wheelchairs and scooters designed to aid mobility impaired persons
OFFICIAL MAP - A map adopted by ordinance pursuant to Article IV of the Municipalities Planning Code, 53 P.S. § 10401 et seq.
OPEN SPACE - The unoccupied space open to the sky on the same lot with the building, not including parking lots. Parking lots shall not be permitted in required open space.
OPEN SPACE, USABLE - A parcel or parcels of land or an area of water or a combination of land and water within the development site and designed and intended for the use or enjoyment of residents of the subdivision or mobile home park or other development, not including streets, off-street parking areas and areas set aside for public facilities.
PAVED SURFACE - Asphalt or concrete stabilized pad, road, driveway, or parking area.
PEDESTRIAN TRAFFIC - Movement or travel by a non-motorized means.
PERCOLATION TEST - A procedure to determine the absorption rate of the soil in an area proposed as the installation site for an on-lot septic system. Such a test will be carried out according to the requirements of the Pennsylvania Department of Environmental Protection.
PLANNED RESIDENTIAL DEVELOPMENT - An area of land, controlled by a landowner, to be developed as a single entity for a number of dwelling units, or combination of residential and nonresidential uses, the development plan for which does not correspond in lot size, bulk, type of dwelling or use, density or intensity, lot coverage and required open space to the regulations established in any one district created, from time to time, under the provisions of this chapter.
PLANNING AND ZONING DEPARTMENT - Staff of the Township of Antrim who have the responsibility of enforcing the Subdivision and Land Development Chapter and the Zoning Chapter of the Code of the Township of Antrim.
PLANNING COMMISSION - The Planning Commission of Antrim Township.

PLAT - The map or plan of a subdivision or land development, whether preliminary or final.
PRINCIPLE BUILDING - The most significant structure on a parcel of land that houses the primary use of the property.
PUBLIC - Owned, operated or controlled by a government agency (federal, state, or local).
PUBLIC GROUNDS - Includes:

A. Parks, playgrounds, trails, paths and other recreational areas and other public areas.
B. Sites for schools, sewage treatment, refuse disposal and other publicly owned or operated facilities.
C. Publicly owned or operated scenic and historic sites.

PUBLIC HEARING - A formal meeting held pursuant to public notice by the board of Supervisors or Planning Commission, intended to inform and obtain public comment, prior to taking action in accordance with this chapter.
PUBLIC MEETING - A forum held pursuant to notice under the Act of July 3, 1986 (P.L. 388, No. 84), known as the "Sunshine Act," 65 P.S. § 271 et seq.
PUBLIC NOTICE - Notice published once each week for two successive weeks in a newspaper of general circulation in the Township. Such notice shall state the time and place of the hearing and the particular nature of the matter to be considered at the hearing. The first publication shall not be more than 30 days and the second publication shall not be less than seven days from the date of the hearing.
RECREATIONAL SPACE - Open space designed or designated for active and passive recreational uses.
RECREATIONAL TRAILS - Non-motorized, pedestrian pathways and bike trails for the intended purpose of enjoyment and exercise.
RUNOFF - The surface water discharge or rate of discharge of a given watershed after a fall of rain or snow that does not enter the soil but runs off the surface of the land.
SCREENING - A well maintained fence, wall, hedge or vegetative material at least five feet in height and of a density to conceal from the view of adjoining property owners the structures and uses of the premises on which the screening is required to be located.
SECRETARY - The Township Secretary of Antrim Township
SHARED USE TRAILS - Pedestrian pathways and bike trails, located at the right of way line of streets and roads with the intended purpose of providing a non motorized network throughout the community.
SLOPE - Slopes are to be expressed in a percentage based upon the vertical difference in feet per one-hundred (100) feet of horizontal distance.
SOILS ANALYSIS - A procedure to permit visual inspection of geological formations and water table level in an area proposed as the installation site for an on-lot septic system. Such test will consist of a trench which shall be as a minimum two feet wide and six feet deep or four feet below the proposed installation level of the septic field, whichever is deeper. Such tests may be referred to as a "deep probe" or inspection trench and shall be opened for inspection by the Township and the Department of Environmental Protection.
STREET - Includes street, avenue, boulevard, road, highway, freeway, parkway, lane, alley, viaduct and any other ways used or intended to be used by vehicular traffic or pedestrians whether public or private.
STREET LIGHTS - Illumination along roadways and at intersections intended to enhance visibility when it is dark.

STRUCTURE - Any man-made object having an ascertainable stationary location on or in land or water, whether or not affixed to the land.
SUBDIVIDER - The owner, developer or the authorized agent of the owner of a subdivision or land development.
SUBDIVISION - The division or re-division of a lot, tract, or parcel of land by any means into two or more lots, tracts, parcels or other divisions of land, including changes in existing lot lines for the purpose, whether immediate or future, of lease, partition by the court for distribution to heirs or devisees, transfer of ownership or building or lot development; provided, however, that the subdivision by lease of land for agricultural purposes into parcels of more than 10 acres, not involving any new street or easement of access or any residential dwelling, shall be exempted.
SUBSTANTIALLY COMPLETED - Where, in the judgment of the Township Engineer, at least 90% (based on the cost of the required improvements for which financial security was posted pursuant to the requirements of this chapter) of those improvements required as a condition for final approval have been completed in accordance with the approved plan, so that the project will be able to be used, occupied or operated for its intended use.
SURVEYOR - A person licensed as a surveyor by the Commonwealth of Pennsylvania
SWALE - A low-lying stretch of land in which gathers or carries surface water runoff.
TOWNSHIP - Antrim Township, Franklin County, Pennsylvania
TRAFFIC IMPACT STUDY - A study prepared pursuant to the requirements of Antrim Township an/or the Pennsylvania Department of Transportation.
WETLANDS - An area of land and/or water meeting one or more of the definitions of wetland under Federal and/or Pennsylvania law and/or regulations.
YARD, FRONT - The yard on which the house fronts on the public private road right of way and shall coincide with the address. There shall only be one front yard per parcel.
YARD, REAR - The opposite of the front yard and every lot shall have a rear yard. There shall only be one rear yard per parcel.
YARD, SIDE - Any yard or yards other than the front yard or rear yard.

ARTICLE III – PLAN PROCEDURES

§ 125-10. Approval of Township required; compliance with standards.

A. From and after the effective date of this chapter, no Subdivision or development of any lot, tract or parcel of land within the Township shall be made, and no street, sanitary sewer, storm sewer, water main or other facility in connection therewith shall be laid out, constructed, opened or dedicated for public use or travel or for the common use of occupants of buildings abutting thereon, unless and until a plan for Subdivision or Land Development has been approved by the Board of Supervisors and recorded and until the improvements required by the Board of Supervisors in connection therewith have either been constructed in strict accordance with the standards and specifications of the Township or guaranteed as provided in this chapter, and further conditioned upon said activity being performed in strict accordance with the provisions of this chapter.
B. No lot in a Subdivision or Land Development may be sold, no permit to erect, alter or repair any structure upon land in a Subdivision or Land Development may be issued, no structure may be erected, and no changes may be made in the contour of the land; and no grading, excavating, removal or destruction of the topsoil, trees or other vegetative cover of the land may be commenced in a Subdivision or Land Development unless and until a plan for the

Subdivision or Land Development has been approved by the Board of Supervisors and recorded, and until the improvements required by the Board of Supervisors in connection therewith have either been constructed in strict accordance with the standards and specifications of the Township or guaranteed as provided in this chapter.

C. Said standards and specifications, particularly as presented in Article IV of this chapter, are declared to be a minimum guaranty that all streets shown on any proposed plan are of sufficient width and proper grade and so located as to accommodate the probable volume of traffic thereon, afford adequate light and air, facilitate fire protection, provide access for fire-fighting equipment to buildings and provide a coordinated system of streets conforming to the Township's Official Map or Comprehensive Plan; and further, that the land whereon buildings are to be constructed is of such character that it can be used for building purposes without danger to health or peril from fire, flood, or other hazard and that all necessary or required erosion and sedimentation facilities be installed prior to or during the initial phase of construction of the Subdivision or Land Development.

§125-11. Consultation with Township and sketch plan (optional)

A. The conference and any other communications shall be kept as confidential as possible. However, any documents or communications submitted in connection with the sketch plan may be subject to disclosure under the Pennsylvania Right to Know Act. Sketch plans shall not be considered as formal applications for either subdivision or land development and shall not be subject to the time requirements as set forth in Section 508 of the Pennsylvania Municipalities Planning Code and the time requirements as set fort in this Chapter. Prior to land acquisition, subdivision, or development the subdivider or developer should be familiar with these regulations and should consult with the Township about the following factors:
   1. The suitability of the site for development.
   2. The demand for a development of the type proposed in the particular location proposed.
   3. The accessibility of the site.
   4. The availability of public facilities (schools, parks, water, sanitary and storm sewerage, etc.) and public services (police, fire, refuse disposal, etc.).
   5. Conformance of the proposed development with the comprehensive plan of the Township.
   6. Sewage facilities requirements of the Department of Environmental Protection and the Township.
   7. Erosion and sedimentation plans and permits as required by the Department of Environmental Protection and as reviewed by the Franklin County Conservation District.
   8. Requirements of Chapter 150, Zoning.
   9. Precautionary measures to preserve or protect historic and natural features.
   10. Approvals by all appropriate local, state and federal agencies.

B. It is highly recommended, but not required, that the subdivider or developer submit a sketch plan for review before making a formal submission. Such review shall be limited to Township staff unless the subdivider or developer provides written authorization agreeing to reimburse all review fees incurred by the Township's engineer.

§ 125-12. Subdivision and Land Development Plan Submission.

A. The subdivider or land developer shall submit copies of proposed plans to the Township Planning and Zoning Department in accordance with subsections (E) and (F) below. Plans

shall be distributed to the appropriate agencies as provided for in § 125-13. All plans when first submitted shall be clearly marked as Preliminary or Final Plans, but not both.

B. Preliminary Plans. Preliminary Plans may be submitted for review and approval by the Board of Supervisors. Such plans shall comply with all the applicable regulations. Upon approval of Preliminary Plans, the subdivider or developer may grade and install infrastructure. No lots may be sold and no permits may be issued for any structures not related to the infrastructure until Final approval is obtained. Financial security, recreation fees and repair and improvement charges are not required for Preliminary approval. Preliminary Plans are not required to be submitted before submission of Final Plans.

C. Final Plans. Final Plans may be submitted for review and approval by the Board of Supervisors. Such plans shall comply with all the applicable regulations. If Preliminary Plans were previously approved, the Final Plan shall conform, in all important details, to the approved Preliminary Plan. Any change shall constitute a new plan submission and is subject to all current regulations. Financial security shall be provided and all other applicable fees shall be paid prior to Board of Supervisors approval. Final Plans shall be recorded within 90 days of the Board of Supervisors signature.

D. Exemptions and Modifications.

1. Exemptions. The following are exempt or partially exempt from the provisions of this chapter:
   a. The conversion of an existing single-family detached dwelling or single-family dwelling semidetached into not more than three residential units, unless such units are intended to be a condominium.
   b. The addition of a residential accessory building on a lot or lots subordinate to an existing principal building.
   c. Agricultural buildings less than 10,000 square feet.
   d. The addition or conversion of buildings or rides within the confines of an enterprise which would be considered an amusement park. For the purposes of this subsection, an "amusement park" is defined as a tract or area used principally as a location for permanent amusement structures or rides. This exclusion shall not apply to newly acquired acreage by an amusement park until initial plans for the expanded area have been approved by proper authorities.
2. Modifications.
   a. The Board of Supervisors may grant a modification of the requirements of one or more provisions of this chapter if the literal enforcement will create undue hardship because of particular conditions pertaining to the land in question, provided that such modifications will not be contrary to the public interest and that the purpose and intent of this chapter is observed.
   b. All requests for a modification shall be in writing and shall accompany and be a part of the application for development. The request shall state in full the grounds and facts of unreasonableness or hardship on which the request is based, the provision or provisions of this chapter involved and the minimum modification necessary to afford relief.
   c. Any request for modification shall be referred to the Antrim Township Planning Commission for advisory comments.
   d. The Board of Supervisors shall keep a written record of all action on all requests for modifications.

E. Formal Submissions to the Township shall contain at a minimum:
   1. Antrim Township Subdivision/ Land Development Application.
   2. Subdivision/ Land Development fees as approved by the Board of Supervisors by check made payable to Antrim Township.
   3. Letter of Transmittal listing all submitted items.
   4. Franklin County Planning Commission review application and submission fees on a check made payable to the Franklin County Planning Commission. Fees must be obtained from the Franklin County Planning Commission.
   5. Eleven (11) full sets of the plan.
   6. One (1) hard copy of all reports relating to stormwater, traffic, erosion control, hydrogeology, and all other applicable reports or studies.
   7. Sewage Facilities Planning as required.
   8. One (1) electronic submission of the full plan set and all reports in a portable document format (.pdf) or in a format approved by Antrim Township.

F. Informal resubmission. An informal resubmission may be made during the review process to allow a subdivider or developer to receive a review of revisions. Such informal submission neither extends timing provisions nor allows approval from Commissions or Boards. Notwithstanding anything in this section, the Supervisors have the right to disapprove the plan if an extension request is not submitted and approved by the Supervisors. Informal resubmissions shall contain at a minimum:
   1. Letter of Transmittal listing all submitted items.
   2. Comment response letter(s).
   3. Two (2) full sets of revised plans.
   4. One (1) hard copy of all revised reports.
   5. One (1) electronic submission of the full revised plan set and all revised reports in a .pdf or in a format approved by Antrim Township.

§ 125-13. Review Process and requirements.

A. Approving Agencies. The following agencies shall review and make determinations, when applicable, on subdivision and land development plans submitted to Antrim Township for approval. When a change is required by an approving agency, the changes shall be made to all plans prior to re-submittal for approval.
   1. Franklin County Planning Commission (FCPC).
      a. No plan shall be acted on by the Antrim Township Planning Commission or the Antrim Township Board of Supervisors without first being acted on by the Franklin County Planning Commission unless the FCPC fails to respond within thirty (30) days from the date the plan was forwarded to them.
   2. Antrim Township Planning Commission (ATPC).
      a. All plans shall be referred to the Antrim Township Planning Commission for a recommendation to the Board of Supervisors.
      b. Plans will be added to the next ATPC regular meeting agenda provided the plans are received at least ten (10) days in advance. This does not mean the plans will be acted on by the ATPC; only that they will be listed on the agenda.
      c. The ATPC shall act on a plan within sixty (60) days following the date of the next regular ATPC meeting from when the application was filed. If the next regular

meeting is greater than thirty (30) days from the date of application, the sixty (60) days shall be counted from the thirtieth (30th) day of the application date.

d. An extension of time may be agreed to as provided for in Section 508 of the Municipalities Planning Code (MPC).

3. Antrim Township Municipal Authority (ATMA)/ Greencastle Area Franklin County Water Authority (GAFCWA)
   a. A plan for properties that are served by sewer or water that are within five-hundred (500) feet of sewer or water by the Antrim Township Municipal Authority or the Greencastle Area Franklin County Water Authority shall receive approval from such entity before the plan can go to the Board of Supervisors for action.
   b. The submission to the GAFCWA shall be made by the developer.
4. Pennsylvania Department of Environmental Protection Agency (PADEP).
   a. When required, the developer is responsible for submitting and obtaining approval for appropriate planning and permitting for sewer, water, erosion and sedimentation controls, stream crossing or alteration, and or other regulated activities from the PADEP.
5. Franklin County Conservation District (FCCD).
   a. The developer is responsible for submitting plans to the Franklin County Conservation District.
   b. A copy of the approved stamped set of Erosion and Sedimentation plans shall be inserted into each set of the plans submitted to the Township.
6. Other approvals.
   a. Township staff, Township engineers and, when required, other approving agencies shall review and comment on plans.
7. Antrim Township Board of Supervisors (BOS).
   a. The Subdivision and Land Development plans shall be subject to approval, modification, or rejection by the BOS.
   b. Approval of Preliminary or Final Plans by the Board of Supervisors shall be considered approval of the arrangement and dimensions of streets, lots, utilities, and other features shown on the plans and may be made conditionally on specified changes to be incorporated in the plans.
   c. When a Final Plan is conditionally approved, the Board of Supervisors shall not sign such plans until all conditions are satisfied. The plan's approval date shall be the date the conditions are satisfied.
   d. Before acting on any plan, the Board of Supervisors may arrange for a public hearing thereon after giving such notice as it may deem necessary and desirable in such case.
   e. In the event that such plan is disapproved, the reason therefore shall be set forth in writing.
   f. All the above agencies, as required, shall have acted on the plans prior to BOS action and all staff and engineering comments shall be satisfied.
   g. All fees as required shall be paid prior to BOS action.
   h. Prior to Board of Supervisors approval and after all revisions have been made, an electronic copy of a complete plan set in State Plane 83 South shall be submitted to the Township in accordance with this chapter.
   i. Financial Security shall be in place prior to BOS final approval.

B. Fees.

The following fees shall be paid by the subdivider or developer to the Township:

1. Filing fees. For the filing of a Preliminary or Final Plan, the fee shall be set forth from time to time by resolution of the Board of Supervisors.
2. Review fees.
   a. Review fees shall include the reasonable and necessary charges by the Township's professional consultants, Solicitor, and/or Engineer for review and report to the Township, and shall be set by resolution. Such review fees shall be reasonable and in accordance with the ordinary and customary charges by the Township Engineer or consultant for similar service in the community, but in no event shall the fees exceed the rate or cost charged by the Engineer or consultant to the Township when fees are not reimbursed or otherwise imposed on applicants.
   b. In the event that the applicant disputes the amount of any such review fees, the applicant shall, within ten (10) days of the billing date, notify the Township that such fees are disputed, in which case the Township shall not delay or disapprove a Subdivision or Land Development application due to the applicant's request over disputed fees.
   c. In the event that the Township and the applicant cannot agree on the amount of review fees which are reasonable and necessary, then the fees shall be recalculated and recertified by another professional engineer licensed as such in the commonwealth and chosen mutually by the Township and the applicant or developer. The estimate certified by the third engineer shall be presumed fair and reasonable and shall be the Final estimate. In the event that a third engineer is so chosen, fees for the services of said engineer shall be paid equally by the Township and the applicant or developer.
3. Sewer fees.
   a. No Subdivision or Land Development plans shall be given Final approval until all applicable fees prescribed in Chapter 110 entitled "Sewers" or as prescribed on the Antrim Township Fee Schedule as set forth by the Board of Supervisors annually, have been paid in full, except that tapping fees for each EDU within the Subdivision need not be paid until individual land use permits are applied for.
4. Recreation fee.
   a. Purpose. The purpose of this section is to ensure that present and future residents of the Township of Antrim will have available to them adequate parks, recreational areas and facilities by establishing requirements for the dedication of land or a fee in lieu of such dedication to be imposed upon subdividers and land developers as authorized by the Municipalities Planning Code. All land so dedicated or fees collected in lieu thereof shall be used only for the purpose of providing accessible park or recreational facilities.
   b. Applicability. This section shall apply to all Subdivisions and Land Developments in Antrim Township.
      c. General requirement. Every Subdivision or Land Development shall, as a condition of approval and subject to the standards for acceptance set forth hereafter, provide for the development of recreational areas or facilities by either the dedication of land suitable therefore or the payment of a fee in lieu of such dedication in accordance with the hereinafter established standards:

(1) Land dedication requirement. Except as hereinafter provided, every owner, subdivider or developer of a Subdivision or Land Development shall dedicate a portion of the land proposed for said development to the Township for recreational purposes in accordance with the following standards and formula:

a) Single-family detached or semidetached dwelling developments shall dedicate a minimum of one-thousand-five-hundred (1,500) square feet per lot or dwelling unit.

b) Multifamily dwelling developments shall dedicate a minimum of one-thousand-five-hundred (1,500) square feet per unit. Twenty-five percent (25%) of the land so dedicated may be included in and used to satisfy the open space requirement for development.

c) Conversions from single to multifamily dwelling developments will be subject to the standard for multifamily dwelling developments.

d) Nonresidential developments, excluding agricultural uses, shall dedicate a minimum of ten percent (10%) of gross land area to recreational use.

e) Single lot one (1) time exemption. The Subdivision or development of one (1) single-family residential lot from a larger tract shall be exempt from the dedication or fee requirements of this chapter; provided however, that this exemption shall be available one (1) time only and further Subdivisions or Land Development from the same tract shall not be exempted.

(2) Standards and criteria for dedication and acceptance of recreational land.

a) Acceptance and dedication shall be at the option of the Board of Supervisors. In determining whether to accept or reject land offered for dedication the Board shall consider the recommendation of the Parks and Recreation Board and the following factors:

i. All land offered for dedication shall be contiguous and located in a single area of not less than three (3) acres.

ii. Not more than twenty-five percent (25%) of the offered land shall be located in a floodplain or exceed a slope in excess of eight percent (8%).

iii. Offered land must be suitable for recreational use as a public park based upon its size, topography and soil conditions. Land shall not be considered suitable when used for inappropriate dual purposes, including but not limited to erosion and sedimentation control and stormwater management.

iv. Offered land shall abut and have direct access to a public road and shall be suitable for the installation of water and sewer facilities and other utilities.

v. The decision of the Board of Supervisors to accept or reject dedication shall be conclusive. In the event that dedication is rejected, the developer or subdivider shall comply with the provisions herein for payment of a fee in lieu of dedication. The developer shall also have the option of providing recreational land and facilities which are owned and maintained by a homeowners'

association in accordance with §150-63, provided all above standards are met.

(3) Fees in lieu of dedication. In lieu of dedication of land as aforesaid, the developer or subdivider shall pay a fee to the Township of Antrim in an amount based upon a schedule of fees adopted by resolution of the Board of Supervisors. Said fee schedule shall establish a set fee for lots and dwelling units thereon and may be revised from time to time without further amendment of this chapter.

a) Payment of fees. All fees hereunder shall be due and payable prior to approval of the Final Subdivision or Land Development plan or any phase or section thereof.

b) Use of land or fees received. All land or fees received by the Township shall be used to establish and develop recreational areas and facilities within the Township which shall be reasonably available for use and enjoyment by the residents of the development and Subdivision assessed for said lands or fees. Such facilities shall not however be required to be within or immediately adjoining such Subdivisions or developments. A separate park and recreation capital account in the name of the Township shall be established to set aside the funds collected and ensure their use for recreational purposes exclusively. Said account shall be an interest-bearing account and funds not utilized within the period provided by law shall, upon request, be returned to the owner or developer in accordance with the provisions of Municipalities Planning Code, Section 503.11, vii.

5. Electronic copies.
   a. Once a plan is acted on by the Board of Supervisors, whether Preliminary or Final, the Township shall scan or have the plan electronically copied. Such cost shall be borne by the developer.
6. Recording of plans and agreements at the Franklin County Recorder of Deeds.
   a. Antrim Township staff will deliver the plans, agreements, and/or other documents to the Franklin County Courthouse to be recorded.
   b. Final Plans shall be recorded within ninety (90) days of when the Board of Supervisors sign the plans. Preliminary Plans shall not be recorded.
   c. The Recorder of Deeds shall not accept any plan for recording unless such plan officially notes the approval of the Board of Supervisors and review by the county planning agency.
   d. The Developer shall provide a check made payable to the Franklin County Recorder of Deeds to cover the entire cost for any and all plans, agreements or other documents that shall be recorded.
   e. This check shall be received before the Board of Supervisors act on the plan.
   f. The recording of the plan shall not constitute grounds for assessment increases until such time as lots are sold or improvements are installed on the land within the subject plan.

C. Financial Security.
   1. No plan shall be Finally approved unless the streets shown on such plan have been improved to a mud-free or otherwise permanently passable condition, or improved as

may be otherwise required by this chapter and any walkways, curbs, gutters, streetlights, fire hydrants, shade trees, water mains, sanitary sewers, storm sewers and other improvements as may be required by this chapter have been installed in accordance with this chapter. In lieu of the completion of any improvements required as a condition for the Final approval of a plan, including improvements or fees otherwise required by this chapter, the developer may deposit with the Township financial security in an amount sufficient to cover the costs of such improvements or common amenities, including but not limited to roads, stormwater detention and/or retention basins and other related drainage facilities, recreational facilities, open space improvements, or buffer or screen plantings which may be required.

2. When requested by the developer, in order to facilitate financing, the Board of Supervisors shall furnish the developer with a signed copy of a resolution indicating approval of the Final Plan contingent upon the developer obtaining satisfactory financial security. The Final Plan or record plan shall not be signed nor recorded until the financial improvements agreement is executed. The resolution or letter of contingent approval shall expire and be deemed to be revoked if the financial security agreement is not executed within ninety (90) days, unless a written extension is granted by the Board of Supervisors; such extension shall not be unreasonably withheld and shall be placed in writing at the request of the developer.
3. Without limitation as to other types of financial security which the Township may approve, which approval shall not be unreasonably withheld, federal or commonwealth chartered lending institution irrevocable letters of credit and restrictive or escrow accounts in such lending institutions shall be deemed acceptable financial security for the purposes of this section.
4. Such financial security shall be posted with a bonding company or federal or commonwealth chartered lending institution chosen by the party posting the financial security, provided said bonding company or lending institution is authorized to conduct such business within the commonwealth.
5. Such bond or other security shall provide for and secure to the public the completion of any improvements which may be required on or before the date fixed in the formal action of approval or accompanying agreement for completion of the improvements.
6. The amount of financial security to be posted for the completion of the required improvements shall be equal to one-hundred-ten percent (110%) of the cost of completion estimated as on ninety (90) days following the date scheduled for completion by the developer. Annually, the Township may adjust the amount of the financial security by comparing the actual cost of the improvements which have been completed and the estimated cost for the completion of the remaining improvements as of the expiration of the ninetieth (90th) day after either the original date scheduled for completion or a rescheduled date of completion. Subsequent to said adjustment, the Township may require the developer to post additional security in order to assure that the financial security equals said one-hundred-ten percent (110%). Any additional security shall be posted by the developer in accordance with this subsection.
7. The amount of financial security required shall be based upon an estimate of the cost of completion of the required improvements submitted by the applicant or developer and prepared by a professional engineer licensed as such in the commonwealth and certified by such engineer to be a fair and reasonable estimate of such cost. The Township, upon

the recommendation of the Township Engineer, may refuse to accept such estimate for good cause shown. If the applicant or developer and the Township are unable to agree upon an estimate, then the estimate shall be recalculated and recertified by another professional engineer licensed as such in this commonwealth and chosen mutually by the Township and the applicant or developer. The estimate certified by the third engineer shall be presumed fair and reasonable and shall be the final estimate. In the event that a third engineer is so chosen, fees for the services of said engineer shall be paid equally by the Township and the applicant or developer.

8. If the party posting the financial security requires more than one (1) year from the date of posting of the financial security to complete the required improvements the amount of financial security may be increased by an additional ten percent (10%) for each one (1) year period beyond the first anniversary date from posting of financial security or to an amount not exceeding one-hundred-ten percent (110%) of the cost of completing the required improvements as reestablished on or about the expiration of the preceding one-year period by using the above bidding procedure.
9. In the case where development is projected over a period of years, the Board of Supervisors may authorize submission of Final Plans by sections or stages of development subject to such requirements or guarantees as to improvements in future sections or stages of development as it finds essential for the protection of any Final approved section of the development.
10. As the work of installing the required improvements proceeds, the party posting the financial security may request the Board of Supervisors to release or authorize the release, from time to time, of such portions of the financial security necessary for payment to the contractor or contractors performing the work. Any such requests shall be in writing addressed to the Board of Supervisors, and the Board of Supervisors shall have forty-five (45) days from receipt of such request within which to allow the Township Engineer to certify, in writing, to the Board of Supervisors that such portion of the work upon the improvements has been completed in accordance with the approved plan. Upon such certification the Board of Supervisors shall authorize release by the bonding company or lending institution of an amount as estimated by the Township Engineer fairly representing the value of the improvements completed or, if the Board of Supervisors fails to act within said forty-five (45) day period, the Board of Supervisors shall be deemed to have approved the release of funds as requested. The Board of Supervisors may, prior to Final release at the time of completion and certification by its engineer, require retention of ten percent (10%) of the estimated cost of the aforesaid improvements.
11. Where the Board of Supervisors accepts dedication of all or some of the required improvements following completion, the Board of Supervisors may require the posting of financial security to secure structural integrity of said improvements as well as the functioning of said improvements in accordance with the design and specifications as depicted on the Final Plan for a term not to exceed eighteen (18) months from the date of acceptance of dedication. Said financial security shall be of the same type as otherwise required in this section with regard to installation of such improvements, and the amount of the financial security shall not exceed fifteen percent (15%) of the actual cost of installation of said improvements.

12. If water mains or sanitary sewer lines, or both, along with apparatus or facilities related thereto, are to be installed under the jurisdiction and pursuant to the rules and regulations of a public utility or municipal authority separate and distinct from the Township, financial security to assure proper completion and maintenance thereof shall be posted in accordance with the regulations of the controlling public utility or municipal authority and shall not be included within the financial security as otherwise required by this section.
13. If the financial security has been approved in lieu of the completion of improvements required as a condition for the Final approval of a plan as set forth in this section, the Township shall not condition the issuance of building, grading or other permits relating to the erection or placement of improvements, including buildings, upon the lots or land as depicted upon the Final Plan upon actual completion of the improvements depicted upon the approved Final Plan. Moreover, if said financial security has been provided, occupancy permits for any building or buildings to be erected shall not be withheld following the improvement of the streets providing access to and from existing public roads to such building or buildings to a mud-free or otherwise permanently passable condition, as well as the completion of all other improvements as depicted upon the approved plan, either upon the lot or lots or beyond the lot or lots in question if such improvements are necessary for the reasonable use of or occupancy of the building or buildings.

D. Inspection of improvements; release from improvement bond.
1. When the developer has completed all of the necessary and appropriate improvements, the developer shall notify the Board of Supervisors, in writing, by certified or registered mail, of the completion of the aforesaid improvements and shall send a copy thereof to the Township Engineer. The Board of Supervisors shall, within ten (10) days after receipt of such notice, direct and authorize the Township Engineer to inspect all of the aforesaid improvements. The Township Engineer shall, thereupon, file a report in writing with the Board of Supervisors, and shall promptly mail a copy of the same to the developer by certified or registered mail. The report shall be made and mailed within thirty (30) days after receipt by the Township Engineer of the aforesaid authorization from the Board of Supervisors. Said report shall detail and shall indicate approval or rejection of said improvements, either in whole or in part, and if said improvements, or any portion thereof, shall not be approved or shall be rejected by the Township Engineer, said report shall contain a statement of reasons for such non-approval or rejection.
2. The Board of Supervisors shall notify the developer, within fifteen (15) days of receipt of the Engineer's report, in writing, by certified or registered mail of the action of said Board of Supervisors with relation thereto.
3. If the Board of Supervisors or the Township Engineer fails to comply with the time limitation provisions contained herein, all improvements will be deemed to have been approved and the developer shall be released from all liability, pursuant to its performance guaranty bond or other security agreement.
4. If any portion of said improvements shall not be approved or shall be rejected by the Board of Supervisors, the developer shall proceed to complete the same, and, upon completion, the same procedure of notification, as outlined herein, shall be followed.

5. Nothing herein, however, shall be construed in limitation of the developer's right to contest or question by legal proceedings or otherwise, any determination of the Board of Supervisors or the Township Engineer.
6. Where herein reference is made to the Township Engineer, he or she shall be as a consultant thereto.
7. The applicant or developer shall reimburse the Township for the reasonable and necessary expense incurred for the inspection or improvements according to a schedule of fees adopted by resolution of the Board of Supervisors and as from time to time amended. Such expense shall be reasonable and in accordance with the ordinary and customary fees charged by the Township Engineer or consultant for work performed for similar services in the community, but in no event shall the fees exceed the rate or cost charged by the Engineer or consultant to the Township when fees are not reimbursed or otherwise imposed on applicants.
    a. In the event that the applicant disputes the amount of any such expense in connection with the inspection of improvements, the applicant shall, within 10 working days of the date of the billing, notify the Township that such expenses are disputed as unreasonable or unnecessary, in which case the Township shall not delay or disapprove a Subdivision or Land Development application or any approval or permit related to development due to the applicant's request over disputed engineer expenses.
    b. If, within twenty (20) days from the date of the billing, the Township and the applicant cannot agree on the amount of expenses which are reasonable and necessary, then the applicant and the Township shall jointly, by mutual agreement, appoint another professional engineer licensed as such in the Commonwealth of Pennsylvania to review said expenses and make a determination as to the amount thereof which is reasonable and necessary.
    c. The professional engineer so appointed shall hear such evidence and review such documentation as the professional engineer in his or her sole opinion deems necessary and render a decision within fifty (50) days of the billing date. The applicant shall be required to pay the entire amount determined in the decision immediately.
    d. In the event that the Township and the applicant cannot agree upon the professional engineer to be appointed within twenty (20) days of the billing date, then, upon application of either party, the President Judge of the Court of Common Pleas of the judicial district in which the Township is located (or if at the time there is no President Judge, then the senior active judge then sitting) shall appoint such engineer, who, in that case, shall be neither the Township Engineer nor any professional engineer who has been retained by, or performed services for, the Township or the applicant within the preceding five (5) years.
    e. The fee of the appointed professional engineer for determining the reasonable and necessary expenses shall be paid by the applicant if the amount of payment required in the decision is equal to or greater than the original bill. If the amount of payment required in the decision is less than the original bill by one-thousand dollars ($1,000) or more, the Township shall pay the fee of the professional engineer, but otherwise the Township and the applicant shall each pay half (1/2) of the fee of the appointed professional engineer.

E. Remedies to effect completion of improvements.

In the event that any improvements which may be required have not been installed as provided in this chapter or in accord with the approved Final Plan the Board of Supervisors is hereby granted the power to enforce any corporate bond, or other security by appropriate legal and equitable remedies. If the proceeds of such bond or other security are insufficient to pay the cost of installing or making repairs or corrections to all the improvements covered by said security, the Board of Supervisors may, at its option, install part of such improvements in all or in part of the Subdivision or Land Development and may institute appropriate legal or equitable action to recover the money necessary to complete the remainder of the improvements. All of the proceeds, whether resulting from the security or from any legal or equitable action brought against the developer, or both, shall be used solely for the installation of the improvements covered by such security, and not for any other Township purpose.

F. Dedication of improvements.
   1. Prior to the dedication of roads, water, and/ or sewer, the developer or subdivider shall prepare as built drawings showing the vertical and horizontal location of such improvements. As built conditions shall be CAD drafted red lined revisions overlaid on the approved design. Two (2) copies and (1) electronic copy in State Plane 83 South shall be submitted for review and approval. Additional copies may be requested.
   2. The developer or subdivider shall prepare and submit a deed in a form approved by the Township along with a statement of value. The deed shall include a written legal description of the area to be dedicated as well as a right of way plat on paper no larger than 11"x17". The right of way plat should be contained on one sheet of paper to the greatest extent possible. When two or more sheets are necessary, match lines are required.
   3. An on site inspection of all proposed improvements to be dedicated will be conducted by Township staff and engineer(s). Any deficiencies found from such inspection shall be corrected prior to acceptance of the deed(s).
   4. A maintenance bond shall be supplied in accordance with § 125-13(C).
   5. Upon Township satisfaction with the as built drawings, deed of dedication documents and such improvements, the Antrim Township Municipal Authority and/or the Antrim Township Board of Supervisors, will accept such dedication by Resolution. When roads and sewer or water are being dedicated, the sewer or water lines shall be dedicated to the Antrim Township Municipal Authority before the roads shall be accepted by the Antrim Township Board of Supervisors. The Township reserves the right to reject a deed of dedication if deemed to be in the best interest of the public health, safety, and welfare of the Township.
   6. The deed of dedication, the statement of value and the resolution shall be recorded at the Franklin County Courthouse. The developer shall provide a check made payable to the Franklin County Recorder of Deeds before the documents can be recorded.
   7. The subdivider or developer shall reimburse the Township for all costs incurred.

ARTICLE IV, Design Standards

§ 125-14. Plan requirements.
Final Plans with Preliminary Plan approval shall conform in all important details with Preliminary Plans as previously approved, and any conditions specified in the approval of

Preliminary Plans shall be incorporated in the Final Plans. The following material shall be submitted by a Pennsylvania licensed surveyor or Pennsylvania licensed engineer with an application for review and approval of Subdivision or Land Development plans:

A. Plans shall be submitted on sheet sizes, 18 inches by 24 inches or 24 inches by 36 inches drawn to a scale not smaller than fifty (50) feet to the inch.
B. The standards for Subdivision and Land Development plans are as follows:
   1. Horizontal control surveying accuracy shall meet or exceed N.G.S. Order of Accuracy Third Class.
      a. Maximum error of closure: one to 10,000.
      b. Angular closure, traverse with "N" angle: 15" x SQRT (N).
   2. Vertical control surveying accuracy and contours:
      a. Vertical error of closure: 12 millimeters * SQRT (K), where K is length of the level loop in kilometers; or 0.05 foot * SQRT (M), where M is the length of the level loop in miles.
      b. Contour accuracy and precision: + or - 1/2 contour interval
   3. Site plans shall use a two (2) foot contour interval for all projects requiring public improvements. For slopes greater than 20%, five (5) foot contour intervals may be used.
   4. All plans shall be designed with a minimum of two (2) points plotted/shown in Pennsylvania State Plane 83 South. Additional points may be required by the Township to adequately locate the development.
   5. Horizontal datum shall be Pennsylvania State Plane 83 South.
   6. Elevations shall be NOAA, NGS referenced to vertical controls established by any accepted federal agency (USGS) and a suitable bench mark shall be established within the project and referenced on the plan. Datum for vertical elevation shall be based on the latest established datum. (Currently NAVD 1988)
   7. A typical cross-section drawing for all proposed streets showing rights-of-way, cartway widths, location of curbs, sanitary and stormwater sewers, water pipes, underground utilities, water management facilities, sidewalks, and planting strips.
   8. Profile drawings of all proposed streets showing existing and proposed grade.
   9. Plans and profiles of existing and/or proposed sanitary and storm sewer systems, water distribution systems, and any other pertinent utilities. Such plans shall include grades, pipe sizes and the location of valves and fire hydrants.
C. The following shall be on the first page of a plan. A cover page must be used if there are multiple pages.
   1. An index.
   2. Uniform Parcel Identifier Number (UPI).
   3. Signature blocks for the Franklin County Planning Commission, the Antrim Township Planning Commission, the Antrim Township Municipal Authority, when applicable, the Greencastle Area Franklin County Water Authority, when applicable, and the Board of Supervisors. If a plan enters into more than one municipality, then the plans must obtain signatures as required by that entity as well.
   4. The name and address of the subdivider or developer.
   5. The name and address of the owner(s) of the tract.
   6. The name, seal, certification statement, and signature of the Pennsylvania licensed engineer and/or Pennsylvania licensed surveyor, as warranted by the magnitude of the project.

7. A location map showing the proposed project in relation to adjacent properties and existing streets in that vicinity of the Township.
8. A statement of acknowledgment in legal form, executed by each owner or equitable owner and acknowledged by a notary public, stating that the applicant is the owner or equitable owner of the land which is the subject of the application and that the application as shown on the plat is the act and deed of the applicant and that it is desired to record same.
9. Drawings shall include the source of the survey, topographical features, date of field work and by whom.
10. The Zoning District, its standards, and minimum area regulations.
11. The following notes shall apply and be set forth on the first page when applicable to the project:
    a. During construction a copy of the Township Approved plans must be on site and available at all times.
    b. Township must be notified seven (7) days in advance for a preconstruction meeting.
    c. Any damage to existing Antrim Township roads shall be repaired by the developer to Antrim Township's road construction specifications and to the satisfaction of Antrim Township.
    d. Roads shall be kept free of mud, dirt, stones, and debris for the duration of the project.
    e. All road construction shall be in accordance with Antrim Township's road construction standards in place at time of actual construction.
    f. Construction on a property which is accessed by a public road shall have minimal impact on the road and neighborhood while construction is taking place.
    g. All entrances shall be constructed prior to any excavation taking place. All construction vehicles shall be parked outside of the public rights-of-way and shall only enter and exit the property by means of the construction entrance.
    h. Stormwater swales shall not be altered by any means during any part of the construction of the property, and silt fence shall be placed adjacent to the stormwater swales to prevent any debris and/or alterations to the swales. Where stormwater tiles are required under a driveway, they shall be constructed to be flush with the bottom of the stormwater swales to allow the water to keep flowing through the swale. If a stormwater swale is altered or damaged during construction, the property owner will be responsible for reconstructing the swale as per the approved plan and will bear the expense of the Township Engineer visiting the site to determine if the swale was constructed as per the approved plans.
    i. The Township shall be responsible for ordering and installing signs on all roads to be dedicated to the Township after the developer has paid for them.
    j. Either permanent or temporary stop signs shall be installed at street intersections as soon as the road surface is improved to a mud-free condition.
    k. Utility easements are offered for dedication to their respective Authority upon approval and acceptance of said respective authority.
    l. Road(s) shall be offered to the Township for dedication once development is built out at a minimum of seventy-five (75) percent.

m. A maintenance bond valid for eighteen (18) months from the date of acceptance must be provided in a form approved by the Township before dedication of road and/or utilities.
n. No trees, shrubs, fences, buildings, or improvements are permitted within the line of sight.
o. No trees, shrubs, fences, buildings, or improvements are permitted within any right of ways or easements, existing or proposed, as shown on the plan.
p. Recreational objects shall not be located, either permanently or temporarily, within the road right-of-way.
q. The Contractor shall notify the following utilities or agencies at least five (5) days before starting work shown on these drawings (provide current name and phone numbers for each entity):
   PA One Call System
   Antrim Township
   Franklin County Soil Conservation District
   Antrim Township Municipal Authority
   Gas Transmission
   Power Company
   Cable Franchiser
   Greencastle Area Franklin County Water Authority
r. All driveways shall be located as shown on the approved plans unless approved by Antrim Township to be re-located at time of driveway permit application.
s. The distance of all driveways on corner lots must be maximized away from road intersections.
t. All driveways shall be constructed so as not to impair drainage within the right-of-way, alter the stability of the improved area or change the drainage of the Township road and adjacent areas.
u. All driveways shall have a minimum fifteen inch (15") culvert pipe or equivalent where a drainage ditch or swale exists.
v. Driveways serving residential use properties shall be a minimum of twelve (12) feet in width and have at a minimum a five-foot (5') radius.
w. Residential driveways shall be a paved surface with a four (4) inch minimum depth within the road right-of-way.
x. All nonresidential driveways and parking areas intended for use by the public shall be paved in their entirety.
y. Plans with Cul-de-sacs shall have the following notes:
   1) There shall be no more than three (3) driveways off the cul-de-sac.
   2) Mailbox clusters are required prior to entering the cul-de-sac and shall be shown on the plan. Mailboxes shall not be placed within the area of the cul-de-sac.
   3) Pillars, piers, monuments, or any other structures are not at any time permitted within the right-of-way of the cul-de-sac.
   4) If the use is residential; only single-family dwellings are permitted in cul-de-sacs.
   5) No parking shall be permitted in cul-de-sacs. Signage shall be posted prohibiting parking.
   6) Two (2) snow easements 20 feet wide x 20 feet long shall be provided at the two o' clock and ten o'clock positions measuring from the edge of the pavement to

provide an area for snow to be stockpiled. This area shall remain free of improvements.

z. Warning: Residents shall expect the smell of farm animals and the manure they produce, chemical sprays, slow-moving agricultural machinery on roads and other by-products of agricultural activity.

aa. Property owners shall own and maintain all curbs, sidewalks, and/or trails on their property or within the right of way.

bb. An HOP shall be obtained from Antrim Township/PennDOT for the entrance onto _____.

cc. Any illumination or flood lighting shall be arranged so there will be no glare of lights upon residences or residential district. Lighting shall also be shielded from the roadway.

dd. Notes addressing:

1) Type of sewer and water service and who it is served by.
2) The purpose of the plan.
3) Compliance with parking regulations.
4) The sites impervious area.
5) Types of structures to be erected and a summary table of the number of structures/dwelling units proposed.
6) Estimated EDU's

D. All plans shall show the following:

1. The limits and dimensions of the tract and/or property to be subdivided or developed and the proposed name or identifying title of the project.
2. All existing buildings, railroads, easements, rights-of-way, public lands, tree masses, streams, bodies of water, primary conservation areas, monuments, and other features within one-hundred (100) feet of the Subdivision.
3. The date, scale and North point.
4. Existing and proposed streets, including the name, Township or State Route number, width of the right-of-way and cartway.
5. Names of the owners of adjoining tracts, including those across roads, streams, etc.
6. The location and dimensions (when applicable), of all existing and proposed:
   a. monuments.
   b. traffic lights, street lights, and street signs.
   c. sewer facilities, public or otherwise.
   d. perc sites and replacement areas shall be shown.
   e. water facilities, public or otherwise.
   f. fire hydrants, water lines, water easements etc.
   g. stormwater facilities.
   h. curbs.
   i. sidewalks.
   j. primary conservation areas and their easements.
   k. tree masses, streams, ponds and other features.
   l. buildings and structures, historical and otherwise.
   m. railroads
   n. easements and/or rights-of-way
   o. public lands.

p. Township boundary lines.
q. Zoning lines, if split zoning.
r. driveways in accordance with § 125-17(C)(3)
s. minimum building setback lines.
t. buffer zones and screening.
u. trails.

E. All Subdivisions or Land Development plans shall connect to public utilities as required in § 110 entitled "Sewers" and § 143 entitled "Water supply". Private wells and or septic systems shall comply as set forth in §110.

F. Any property requiring that a Subdivision or Land Development plan (as defined in this chapter) be filed pursuant to this chapter shall also file a stormwater management plan pursuant to the requirements of Chapter 126 of the Code of the Township of Antrim.

G. The measures used to control erosion and reduce sedimentation shall at a minimum meet the erosion and sedimentation control standards and specifications as set forth in the Erosion and Sediment Pollution Control Program Manual, Commonwealth of Pennsylvania, Department of Environmental Protection, Bureau of Soil and Water Conservation, March 2012, as amended. Copies of this document are available from the commonwealth and through the Franklin County Conservation District Office.

§ 125-15 Conservation Practices.

A. Primary Conservation Areas.

1. Primary Conservation Areas shall be preserved in perpetuity by a Conservation Easement in all Zoning Districts. The Conservation Easement shall extend twenty (20) feet beyond the perimeter of the Primary Conservation Areas to provide a buffer zone.
2. Such areas shall be protected from mechanical injury during the construction of the site and any grading changes to the remainder of the site shall be proposed in such manner that it will not adversely affect the existing vegetation, drainage, soils, or root system of the retained portion.
3. State and Federal regulations permit construction within these areas. However, Antrim Township has the right and is requiring preservation areas within the Township. The following shall be permitted in accordance with State and Federal law only when the criteria of this section is met and the Board of Supervisors has granted approval. The Board of Supervisors shall render the Final decision after receiving a recommendation from the Township Planning Commission and Engineer.
   a. The relocation or disturbance of wetlands shall only be permitted when all the following criteria can be adequately proven that:
      1) isolated wetlands are less than one-thousand (1,000) sq. ft.
      2) the wetlands are not contiguous from another property and meet the criteria of this section when combined.
      3) the wetlands are not connected to or touched by a body of water.
   b. Stream restoration/improvement when it is clearly shown that the quality of the stream will be enhanced.
   c. Stream crossing when it is proven that such crossing would be an asset or improvement to the Township and that such crossing, if permitted, would minimize the impact to the stream and surrounding area.

B. Historically Significant Sites or Structures.

1. Historically Significant Sites or Structures in the A, R-1, R-2, CC, and HC Zoning Districts shall be preserved and maintained in perpetuity.
2. A Conservation Easement or other means of perpetual preservation and maintenance shall be provided.
3. Practical uses may be proposed for historical structures that will not negatively impact the historical integrity of the structure. A written plan shall be submitted for review and approval by the Township showing that such use will make good use of the structure and not damage the historical integrity in any way.

C. Recreational Trails.
1. Areas designated by the Township on the official map for recreational trails shall be constructed in accordance with this chapter at the time the property is developed or as required by the Township.
2. The course of the recreational trail within the tract may be altered from the Official Map as long as the point where the trail enters and exits the tract remains the same, aligns with existing trails, and remains consistent with the Official Map.
3. Recreational Trails shall be properly protected by an easement or other similar method to ensure proper maintenance and access.
4. Recreational Trails at a minimum shall not be less than five (5) feet in width and shall maintain a vertical clearance of eight (8) feet. Where curb ramps and driveway crossings are used, level landings that meet the minimum width shall be provided. Recreational Trails shall be constructed of a stable surface that remains unaltered by a person walking, using a bicycle, or using a wheelchair. In all other respects, Recreational Trails shall meet the design specifications and recommendations of the Federal Highway Administration Part II of II Best Practices Design Guide, Chapter 14, Shared-Use Path Design, dated September 2001 and subsequent revisions.
5. Motorized traffic shall be prohibited and Recreational Trails shall be designed to deter such traffic.

D. Woodland Preservation.
1. Woodland preservation shall apply to all properties located in the A, R-1, R-2, CC, and HC Zoning Districts.
2. Woodland relocation may be permitted in the HC zoning district if proof that the woodland area creates a hardship. The Board of Supervisors shall make the Final decision on whether the relocation will be permitted. If relocation is permitted, then the new location shall be of suitable soils and grade to allow for healthy growth of trees of the same species. The acreage and density of the woodland shall be the same.
3. A minimum of eighty (80) percent of woodland areas of one (1) acre or greater, measured from the drip line, shall be preserved by a conservation easement. The conservation easement shall extend twenty (20) feet from the edge of the drip line as it existed the day the plans are submitted to the Township. Woodlands contiguous with woodlands on neighboring properties shall be given priority for preservation.
4. The woodland shall be undisturbed, except for the removal of dead or diseased trees, and/or except for normal removal of trees for prudent woodland management to allow for proper tree growth.

E. The Township recognizes that landowners have the right to reasonably develop their property. Therefore, all landowners shall comply with the requirements of Section 125-15(A), (B), (C), and (D). However, compliance shall be required to the extent that landowner

shall be able to develop his land with a density of one (1) lot per eighty-thousand (80,000) square feet. If, the property contains more than one (1) of the areas described in Section 125-15 (A), (B), (C) or (D), the Primary Conservation areas shall be preserved first. The developer shall incorporate Sections 125-15(B), (C), or (D), as a whole or combination thereof, to best fit the land and development to the extent that the density is met.

F. Green Designs and Landscape requirements.
   1. Green Designs. Green designs shall be incorporated into all non residential areas, excluding agricultural uses. Green designs shall, at a minimum, meet the following:
      a. Planting for Green Space shall follow landscape requirements as set forth in this Chapter.
      b. Green Space shall be interconnected within the site as well as to neighboring properties when possible.
      c. Outdoor benches or seating areas are required for food services, establishments that schedule appointments, or are primarily retail.
      d. All sites shall be designed in a manner to create an aesthetic environment that promotes pedestrian traffic and provides rest areas.
   2. Landscape requirements.
      a. Landscape requirements for new development or redevelopment shall be consistent with this section.
      b. A minimum of ten (10) percent of the improved non residential lot(s) shall be landscaped in accordance with this section. Such landscaping is subject to review and approval by the Township.
      c. Native species suitable for soil and climatic conditions shall be primarily used.
      d. Invasive species shall be prohibited.
      e. Landscaping shall be maintained by the property owner(s). Maintenance shall include actions necessary to keep materials and plant life healthy, neat and orderly in appearance and free of litter and debris. All landscaped areas must be protected from damage by motor vehicles or pedestrians. Replacement of trees, bushes, plants or other vegetation that do not survive must be replaced as soon as they show signs of dying with trees, bushes, or plants of a like size and type.
      f. Any change to an approved landscape design shall be reviewed by the Township engineer to ensure consistency with this section.

G. Conservation Easements.
   1. Conservation Easements shall be owned and maintained by an individual, corporation, condominium association, homeowners association, other similar entity or a combination thereof. The articles of incorporation shall be reviewed by the Township Solicitor.
   2. Conservation Easements shall be accompanied by a conservation easement agreement. The agreement shall be between the owner of the easement and the Township to ensure the easement is preserved in perpetuity.
   3. Conservation easement agreements shall be reviewed and approved by the Township Solicitor before such plan shall be approved. Any changes to the agreement shall be reviewed and approved by the Township Solicitor prior to making such change. At a minimum the agreement shall include:
      a. Ownership information.
      b. A description of regular and periodic maintenance responsibilities to ensure the land and/or structures are properly preserved and maintained.

c. A means of perpetual funding to cover all associated costs.
d.Insurance requirements.

4. Antrim Township shall not incur any costs associated with such easement and shall not be responsible for any maintenance of easements.
5. The Township may enter the premises and take corrective action, including extended maintenance. The costs of such corrective action shall be charged to the property owner, condominium association, homeowners association, other similar entity, and/or the individuals who make up such entity along with the administrative costs and penalties. Such costs shall become a lien on said properties. Notice of such lien shall be filed by the Township in the office of the Prothonotary of the County.

§ 125-16. Development Layout.

A. Street layout.

1. Proposed streets shall be integrated with existing and future proposed streets. The redesign of intersections and road sections may be required to facilitate new traffic flow and improve safety. Varied street widths may be required by the Township for safety purposes.
2. When street widths vary, the width shall continue until the next intersection.
3. Streets shall be interconnected as far as practicable. When interconnection is not possible, self-looping streets shall be utilized. Cul-de-sacs shall be avoided and allowed only when interconnection or a self looping street is not possible.
4. Streets shall be designed to make provision for access to all lots and to adjacent undeveloped land.
5. Right of ways shall be reserved to all adjoining properties to allow for the interconnection of streets. These right of ways shall be part of the deed and dedication documents and offered to the Township to ensure future connections.
6. Street length. Streets shall be a minimum of four-hundred (400) feet in length and shall not be more than one-thousand-two-hundred (1,200) feet in length before an intersection or directional change for the purpose of traffic calming.
7. Directional changes. Changes in street direction shall be made by horizontal curves with a minimum radius of five-hundred (500) feet for arterial/collector/industrial/commercial streets and two-hundred (200) feet for residential streets. These radii are to be measured at the center line. Shorter radii may be permitted upon recommendation of the developer's engineer, reviewed and approved by the Township Engineer.
8. Intersections. Street intersections shall be designed according to the following standards:
   a. No more than two (2) streets shall cross at the same point. Street intersections shall be at right angles wherever possible, and intersections of less than seventy degrees (70°) (measured at the center lines of the streets) shall not be permitted.
   b. Intersection streets shall not enter into the same side of collector, commercial, industrial, or arterial streets at intervals of less than eight-hundred (800) feet.
   c. Streets entering another street from opposite sides should be directly opposite each other, or, if necessary, they may be separated by at least two-hundred (200) feet between center lines measured along the center line of the cross street. Greater offsets may be required depending on the importance of the cross street.
   d. Maximum grade within any intersection shall not exceed five percent (5%) in any direction, and approaches to any intersection shall follow a straight course within one-

hundred (100) feet of the intersection. Grades within one-hundred (100) feet of an intersection shall not exceed ten percent (10%).

e. Curb radii at intersections shall be according to the following schedule of minimum lengths: fifteen (15) feet for intersections of alleys with all streets; twenty (20) feet for residential streets; and thirty five (35) feet for commercial, industrial, collector, and arterial streets. Where streets of different categories intersect, requirements for the larger radii shall hold. The maximum radius of intersection right-of-way lines shall be forty (40) feet.

f. When average daily trips warrant signalization, a round about shall be used unless justification can be provided that a round about is not sufficient. The round about shall be of a size to accommodate the type of traffic anticipated based on the most current Federal Highway Administration guidelines.

g. Clear sight distance. Clear sight distance along the center lines of residential streets shall be maintained at not less than one-hundred-fifty (150) feet; along collector streets at not less than two-hundred-fifty (250) feet, and along commercial streets at not less than four-hundred-fifty (450) feet.

9. Streets shall be laid out to promote pedestrian circulation.
10. Any development proposed to have sixty (60) or more living units in the entire master sketch plan shall have two (2) or more public roadway points of ingress and egress. The Board of Supervisors reserves the right to increase or modify this section when special circumstances exist.
11. A development planned to have a total of sixty (60) or more living units, preexisting and proposed, utilizing an existing limited (single) access public roadway, shall provide for a second public roadway for ingress and egress. The Board of Supervisors reserves the right to increase or modify this section when special circumstances exist.
12. Street names. Continuations of existing streets shall be known by the same name, but names for other streets shall not duplicate or closely resemble names for existing streets in the Township and/or region. The use of North, South, East, or West shall not be used unless the street crosses SR 16 or SR 11.

B. Lot layout.

1. Lot size. The minimum lot size, lot width and building setback line shall be as required in Chapter 150, Zoning.
2. Lot lines. Lot lines shall be approximately at right angles or radial to street lines so long as reasonably shaped lots result.
3. Through lots. Double frontage lots are to be avoided and generally will not be permitted unless the lots are a minimum of two-hundred (200) feet deep. Along major highways, through reverse frontage lots served by a minor street may be required in order to protect the character of the highway.
4. Percolation tests and soils analysis. Percolation tests and soil analysis shall be required by the Township on each proposed lot in accordance with the rules and regulations of the Pennsylvania Department of Environmental Protection. From the results of these tests, the lot size shall be established large enough to provide for the specified minimum area required for the absorption field as prescribed in accordance with the requirements of the Pennsylvania Department of Environmental Protection, but in no case shall the lot size be less than the minimum area regulations as set forth in the Zoning Chapter.

5. Recreational Space. Ten percent (10%) of a residential development shall be set aside for recreational space when proposing an average of five (5) or more residential dwelling units per acre in a development. Details of such recreational area(s) shall be shown on the plans. The maintenance and liability shall be with the Homeowners Association or similar association.
6. Trees and shrubbery shall not be located on any rights-of-way and/or any other easements. Recreational objects shall not be located, either permanently or temporarily, within the road right-of-way.

§ 125-17. Streets, driveways, parking, loading/unloading areas, curbs and sidewalk specifications.

A. Streets.

1. Street Classification. Streets shall be designed according to their function and laid out to preserve the integrity of their design in accordance with the following functional classification:
   a. Alley. A minor street privately or publically owned, primarily for service access to the rear or side of properties.
   b. Local Road. A street providing access directly to residential properties. Standards assume light traffic flow with the possibility of upgrading the classification in the future. Generally, a publicly owned and maintained road in the Township with an average daily traffic volume of less than or equal to one-thousand (1,000) vehicles.
   c. Neighborhood Collector. A street which collects residential traffic from local roads to higher level streets. Standards assume medium traffic flow with the possibility of upgrading the classification in the future. Generally, a publicly owned and maintained road in the Township with an average daily traffic volume greater than one-thousand (1,000) vehicles shall be classified as a neighborhood collector. The function shall be to provide traffic access to and from residential areas. Access from a residential property directly onto a Neighborhood Collector shall be limited to not more than one (1) per two-hundred (200) feet and avoided when possible.
   d. Community Collector. A street that provides access to a mix of residential and commercial uses. They may serve as neighborhood collectors, and connectors between residential neighborhoods and higher order streets. Providing for pedestrian traffic is of upmost importance. Access shall be limited to not more than one (1) per two-hundred (200) feet and discouraged when possible.
   e. Commercial Street. A street that is generally a publicly owned and maintained road in the Township, utilized for commercial motor vehicles and is located in commercial zoned areas shall be classified as a commercial street. Access to a commercial street shall be limited to one (1) per two-hundred (200) feet. Accommodations for shared accesses shall be planned and are required.
   f. Industrial Street. A street that is generally publicly owned and maintained, utilized for industrial motor vehicles and located in industrial zoned areas shall be classified as an industrial street.
   g. Community Arterial. Streets that provide mobility between communities and business centers. They provide accesses to commercial centers and provide direct links to higher order, state owned streets. Access shall be limited to not more than one (1) access per five-hundred (500) feet. Accommodations for shared accesses shall be planned and are required.

h. Regional Arterial. A high capacity street that delivers traffic to highways and between urban centers. Access shall be limited to not more than one (1) access per five-hundred (500) feet. Accommodations for shared accesses shall be planned and are required.

2. Street widths. Streets shall be laid out according to the following minimum schedule; however, additional street width may be required as determined by the Township.

Class of Street	Width of R-O-W	Width of Pavement	Width of Pavement w/ Curbs	On Street Parking permitted (8' lane)
Residential Local road	50'	20'	24'	Yes
Neighborhood Collectors	50'	24'	26'	No
Community Collector	50'	24'	26'	Yes
Commercial	80'	28'	32'	Yes
Industrial	80'	32'	36'	No
Community Arterial	80'	32'	36'	No
Regional Arterial	80'	32'	36'	No
Alleys	20'	12'	Not permitted	No

*Right of way widths shall be increased by 5' per parking lane when on street parking is used.

3. All underground utilities shall be located outside of the cartway of any road. When utilities need to cross the road they shall do so at a near perpendicular angle. Sewer and water lines shall be permitted in the cartway. When manholes, valves or other appurtenances are located in the cartway, they shall be centered in the middle of the cartway or travel lane.
4. Residential Street Standards (Refer to Exhibits A and B).
   All residential streets to be dedicated to the Township shall meet the following standards:
   a. Adequate surface and subsurface drainage shall be provided as per the Township ordinance and approved by the Township Engineer.
   b. Streets shall be surfaced to the grades and dimensions drawn on the plans, profiles and cross sections submitted by the applicant and approved by the Board of Supervisors. Before paving the street surface, the applicant must install all required utilities and service laterals and provide storm drainage facilities as were approved by the Board of Supervisors. All subgrade and paving work must be supervised by the Township. The wearing course shall only be placed between April 1 and October 31. Prior to the commencement of paving, the Township shall be contacted to determine the suitability of compaction. The subgrade, pavement base, binder and wearing surface and shoulders shall be constructed in accordance with PennDOT Specifications Publication 408.
   c. All streets shall have a minimum pavement width in accordance with the chart in subsection § 125-17(A)(2).
   d. Inspection. Upon the approval of a street plan, including profiles and layout, the proposed street shall be inspected by the Township as follows:
      1) All time accumulated for review and inspection by the Township, whether pass or fail, shall be reimbursed to the Township by the developer

2) Developer/ Contractor shall contact the assigned inspector a minimum of twenty-four (24) hours prior to each required inspection. Failure to have the Township inspection before proceeding may result in refusal of acceptance of dedication.
3) Subgrade Inspection. After subgrade is completed the Township will require and shall be present for a proof roll.
4) Subbase Inspection. After subbase is completed the Township will require and shall be present for a proof roll.
5) Base Course Inspection. After base course is completed the Township will require and shall be present for an inspection.
6) Wearing Course Inspection. After wearing course is completed the Township will require and shall be present for an inspection.
7) Stormwater facilities shall be inspected continuously during construction.
8) Final inspection will be done upon request, in writing, by the developer/subdivider and after all infrastructures is in place as per the approved plans.

e. Subgrade. All topsoil shall be removed to the natural subsoil and the proposed roadway brought up to subgrade level with approved slate/shale a minimum of thirty-two (32) feet wide.
   1) Prepare the subgrade prior to placing subbase. Do not place subbase material on soft, muddy, or frozen areas, as determined by the Township. Before placing subgrade, satisfactorily correct irregularities or soft areas in the prepared subgrade. Correct unsatisfactory subgrade conditions developing ahead of the base and paving operations by scarifying, reshaping, and re-compacting, or by replacement of subgrade, if directed, which is required to be re-inspected by the Township (according to PennDOT Specifications Publication 408 or other applicable PennDOT regulations).
   2) A proof roll is required for every two (2) feet of depth of fill installed. The proof roll shall be witnessed by the Township inspector.

f. Subbase. A minimum of six (6) inches compacted, of PennDOT-approved 2A coarse aggregate, rolled, shall be placed a minimum of twenty eight (28) feet wide. As an alternative, a minimum of six (6) inches compacted, of approved slate/shale, rolled, and then a minimum of two (2) inches compacted of PennDOT-approved 2A coarse aggregate rolled, shall be placed a minimum of twenty eight (28) feet wide.

g. Base course. A PennDOT-approved Superpave Mix 25mm, based on ESAL's Publication 408, shall be used. A minimum of four (4) inches compacted of 25mm Superpave course, rolled, shall be placed in accordance with the chart in § 125-17(A)(2) for pavement construction. Superpave must be installed according to all PennDOT Specifications. See Publication 408 for paving and asphalt testing (asphalt content and percentage passing No. 200 sieve). All asphalt plant test results must be received and approved by Antrim Township prior to wearing course being applied. Base course full depth core sample shall be taken and the report submitted in accordance with §125-17(A)(4)(j) before proceeding with the next course.

h. Tack Coat. If the wearing course is not installed within twenty-four (24) hours of the finish of the base course, then a tack coat will be required in accordance with Penn DOT Publication 408.

i. Wearing. A PennDOT-approved Superpave Mix 9.5 mm SRL treatment, based on ESAL's Publication 408, shall be used. A minimum of two (2) inches compacted of 9.5

mm Superpave course, rolled, shall be placed in accordance with the chart in §125-17(A)(2) for pavement construction. Wearing must be constructed according to all PennDOT Specifications. See Publication 408 for paving and asphalt testing (asphalt content and percentage passing No. 200 sieve). All asphalt plant test results must be forwarded to Antrim Township within five (5) business days. Wearing course full depth core sample shall be taken and the report submitted in accordance with §125-17(A)(4)(j).

j. Core samples.
   1) Core samples for base and wearing course shall be taken and measured for thickness and density according to PennDOT Specifications. See Publication 408.
   2) All test results of each layer of pavement shall be submitted to the Township and approved prior to the next layer being applied.
   3) The Final test results shall be forwarded to the Township within five (5) business days after application of Subsections (g) and (i) above.
   4) Core locations shall be selected by the Township. At a minimum, one (1) core sample shall be taken within every two-thousand (2,000) square yards. More samples may be required as determined by the Township.
   5) Core holes must be patched and sealed with in-kind material to the Township's satisfaction.

5. Non Residential Street Standards (Refer to Exhibits C and D).

All streets for commercial and industrial developments shall meet the following standards:

a. Adequate surface and subsurface drainage shall be provided as per the Township ordinance and approved by the Township Engineer.
b. Streets shall be surfaced to the grades and dimensions drawn on the plans, profiles and cross sections submitted by the applicant and approved by the Board of Supervisors. Before paving the street surface, the applicant must install all required utilities and service laterals and provide storm drainage facilities as were approved by the Board of Supervisors. All subgrade and paving work must be supervised by the Township. The wearing course shall only be placed between April 1 and October 31. Prior to the commencement of paving, the Township shall be contacted to determine the suitability of compaction. The subgrade, pavement base, binder, and wearing surface and shoulders shall be constructed in accordance with PennDOT Specifications Publication 408.
c. All streets shall have a minimum pavement width in accordance with the chart in subsection § 125-17(A)(2).
d. Inspection. Upon the approval of a street plan, including profiles and layout, the proposed street shall be inspected by the Township as follows:
   1) All time accumulated for review and inspection by the Township, whether pass or fail, shall be reimbursed to the Township by the developer.
   2) Developer/ Contractor shall contact the assigned inspector a minimum of twenty-four (24) hours prior to each required inspection. Failure to have the Township inspection before proceeding may result in refusal of acceptance of dedication.
   3) Sub grade. After sub grade is completed the Township will require and shall be present for a proof roll.
   4) Sub base. After sub base is completed, the Township will require and shall be present for a proof roll.
   5) Base. After base is completed the Township will require and shall be present for an inspection.

6) Binder. After binder is completed the Township will require and shall be present for an inspection.
7) Wearing. After wearing course is finished the Township will require and shall be present for an inspection.
8) Stormwater facilities shall be inspected continuously during construction by the contractor and by the Township.
9) Final inspection will be done upon request, in writing, by the developer/subdivider and after all infrastructure is in place as per the approved plans.

e. Sub grade. All topsoil shall be removed to the natural subsoil and the proposed roadway brought up to sub grade level with approved slate/shale a minimum of thirty-eight (38) feet wide.
   1) Prepare the sub grade prior to placing sub base. Do not place sub base material on soft, muddy, or frozen areas, as determined by the Township. Before placing sub grade, satisfactorily correct irregularities or soft areas in the prepared sub grade. Correct unsatisfactory sub grade conditions developing ahead of the base and paving operations by scarifying, reshaping, and re-compacting, or by replacement of sub grade, if directed, which is required to be re-inspected by the Township. The sub grade must be completed according to Penn DOT Specifications Publication 408 (or other applicable Penn DOT regulations.)
   2) A proof roll is required for every two (2) feet of depth of fill installed. The proof roll shall be witnessed by the Township inspector.

f. Concrete Intersections.
   1) When a traffic study/count shows that the average daily traffic (ADT) is equal to or greater than three-thousand (3,000) for any approach to an intersection, concrete shall be required for that intersection.
   2) Concrete shall be used from the center of the intersection extended back each road a minimum of two-hundred fifty (250) feet.
   3) Concrete intersection construction shall conform to Penn DOT Publication 72M Sections RC-21M and RC-27M.

g. Sub base. A minimum of ten (10) inches compacted of Penn DOT-approved 2A coarse aggregate, rolled, shall be placed a minimum of thirty six (36) feet wide for cartway construction. As an alternative, a minimum of twelve (12) inches compacted of approved slate, rolled, and then a minimum of two (2) inches compacted of Penn DOT-approved 2A coarse aggregate rolled, shall be placed a minimum of thirty six (36) feet wide for cartway construction.

h. Base course/binder course/wearing course. A Penn DOT-approved Superpave Mix based on ESAL's Publication 408 shall be used as follows:
   1) Base course. A Penn DOT-approved Superpave Mix 25 mm compacted with two (2) three (3) inch lifts for a total of six (6) compacted inches of Superpave Mix, rolled, shall be used. A minimum of six (6) inches compacted of Superpave Mix 37.5 mm, rolled, shall be placed at a minimum pavement width in accordance with the chart in subsection §125-17(A)(2). Superpave shall be placed and compacted in lifts with a maximum depth of four (4) inches. Superpave must be installed according to all Penn DOT Specifications. See Publication 408 for paving and asphalt testing (asphalt content and percentage passing No. 200 sieve). All asphalt plant test results must be received and approved by Antrim Township prior to second layer being applied, and

second layer test results must be received and approved by Antrim Township prior to binder course being applied. Base course full depth core sample shall taken and the report submitted in accordance with subsection § 125-17(A)(5)(k) before proceeding with the next course.

2) Tack Coat. If the binder course is not installed within twenty-four (24) hours of the finish of the base course, then a tack coat will be required in accordance with Penn DOT Publication 408.
3) Binder course. A Penn DOT-approved Superpave Mix 19 mm , rolled, shall be used. A minimum of two (2) inches compacted of Superpave Mix 19 mm, rolled, shall be placed a minimum pavement width in accordance with the chart in subsection § 125-17(A)(2). Superpave must be installed according to all Penn DOT Specifications. See Publication 408 for paving and asphalt testing (asphalt content and percentage passing No. 200 sieve). All asphalt plant test results must be received and approved by Antrim Township prior to wearing course being applied.

i. Tack Coat. If the wearing course is not installed within twenty-four (24) hours of the finish of the binder course, then a tack coat will be required in accordance with Penn DOT Publication 408.

j. Wearing course. A Penn DOT-approved Superpave Mix 12.5 mm compacted to two (2) inches shall be used. A minimum of two (2) inches compacted of Superpave wearing course, rolled, shall be placed a minimum of thirty two (32) feet wide for cartway construction. Wearing course must be constructed according to all Penn DOT Specifications. See Publication 408 for paving and asphalt testing (asphalt content and percentage passing No. 200 sieve). All asphalt plant test results to Antrim Township within five (5) business days. Wearing course full depth core sample shall be taken and the report submitted in accordance with subsection § 125-17(A)(5)(k).

k. Core samples.
   1) Core samples for base, binder, and wearing course shall be taken and measured for thickness and density according to PennDOT Specifications, See Publication 408.
   2) All test results of each layer of pavement shall be submitted to the Township and approved prior to the next layer being applied.
   3) The Final test results shall be forwarded to the Township within five (5) business days after application of § 125-17(A)(5)(h)(1),(2), and (3) above.
   4) Core locations shall be selected by the Township. At a minimum, one (1) core sample shall be taken within every two-thousand (2,000) square yards. More samples may be required as determined by the Township.
   5) Core holes must be patched and sealed with in-kind material to the Township's satisfaction.

6. Dead-end streets, Alleys, and Divided streets.
   a. Dead-end streets. All dead-end streets shall be constructed with a cul-de-sac meeting the Township specifications for cul-de-sac design and construction. All dead-end streets must meet Penn DOT Specifications Publication Nine (or other applicable Penn DOT regulations) as it pertains to liquid fuels reimbursement.
      1) Cul-de-sac design specifications are as follows (Refer to Exhibit E):
         a. Permanent cul-de-sacs shall terminate at the closed end with a paved turnaround having a minimum radius of forty (40) feet from the center of the cul-de-sac to the edge of the pavement and with a right-of-way radius of sixty (60) feet.

b. There shall be no more than three (3) driveways off the cul de sac.(This shall be noted on the development plan.)
c. Lots shall allow for a minimum off-street parking of four (4) spaces. (This shall be noted on the development plan.)
d. Mailbox clusters are required prior to entering the cul-de-sac and shall be shown on the plan. Mailboxes shall not be placed within the area of the cul-de-sac. (This shall be noted on the development plan.)
e. No parking shall be permitted in cul de sacs. Signage shall be posted prohibiting parking. (This shall be noted on the development plan).
f. Pillars, piers, monuments, or any other structures are not at any time permitted within the entire right-of-way of the cul-de-sac. (This shall be noted on the development plan.)
g. When the use is residential, only single-family dwellings are permitted in cul-de-sac. (This shall be noted on the development plan.)
h. No recreational objects shall be placed, either permanently or temporarily, within the road right-of-way. (This shall be noted on the development plan.)
i. Cul-de-sacs shall be a one-way street moving in a counterclockwise direction, and the developer shall pay for the necessary signage to post the cul-de-sac as one-way.
j. Two (2) snow easements twenty (20) feet wide by twenty (20) feet long shall be provided at the two o' clock and ten o'clock positions measuring from the edge of the pavement to provide an area for snow to be stockpiled. This area shall remain free of improvements.
k. Commercial and industrial cul-de-sac shall be constructed at least to meet minimum criteria established above and may require a larger radius depending upon the type of use to be serviced.

b. Temporary dead ends. The use of a hammerhead or "T" turnaround shall be used temporarily until a street continues instead of constructing a cul de sac (Refer to Exhibit F).
1) No parking shall be permitted in a "T" turnaround. Signage shall be posted prohibiting parking.
2) No driveways shall be permitted access off a "T" turnaround.
3) A twenty-eight (28) foot radius shall be used to flare out to each end of the "T".
4) The "T" shall at a minimum extend thirty (30) feet in each direction measured from the center line for a total distance of sixty (60) feet. This distance may be increased due to the type of traffic accessing the street, when fire hydrants or other utilities are in the area or for other reasons as deemed necessary by the Township.
5) The width of the area shall not be less than twenty (20) feet.
6) The "T" turnaround shall be paved in accordance with Township standards based on the street classification.
7) When the developer intends to dedicate a street that has a "T" turnaround, the required road right of way width for the street shall be dedicated to the Township all the way to the property line or phase line to ensure future connection.
8) Once the street is continued the excess portion of the street shall be abandoned by saw cutting and removing the macadam that would be outside the cartway so that the cartway width matches the existing and future road. This portion of land shall be

repaired to match the existing grade, seeded and then revert back to the property in which it is located.

c. Alleys (Refer to Exhibit G).

1) Alleys shall not be more than six hundred (600) feet in length, measured from right of way to right of way, before access to a street.
2) Alleys shall be designed with an inverted crown of two (2) percent to accommodate drainage .
3) Alleys shall be paved with reinforced shoulders in accordance with Township standards based on street classification.
4) Alleys with a right of way width less than twenty (20) feet shall not be dedicated to the Township. The Township may accept alleys of twenty (20) feet or greater at their discretion. An ownership and maintenance agreement for private alleys shall be reviewed and approved by the Township. All fees associated with such review shall be reimbursed to the Township.
5) "No parking" signs shall be installed.

7. Grades. There shall be a minimum center line grade of one (1) percent on all streets. Grades shall not exceed five (5) percent on all commercial streets and ten (10) percent on residential and collector streets. Steeper grades may be permitted on residential streets for short distances.
8. Vertical curves. Changes in grade shall be joined by vertical curves, and the maximum rate of change of grade shall be five (5) percent per one-hundred (100) feet of road, provided that the clear sight distance and stopping sight distance is maintained at all points.
9. Crown. The slope of the crown on all streets shall be one-quarter (¼) inch per foot up to three-eighths (3/8) inch per foot.
10. Side slopes. Street cuts and fills shall be provided with side slopes not steeper than one (1) vertical to three (3) horizontal. Such slopes shall be suitably planted with perennial grasses or other vegetation to prevent gullying erosion, as per approval of Franklin County Soil Conservation District.
11. Blacktop restoration. Any excavated areas on streets shall be restored to the Antrim Township road specifications.
12. In addition to other valid reasons, the Township shall not be required to accept for dedication or ordain any street that would not qualify for liquid fuels funding.

B. Construction on a property which is accessed by a public road shall have minimal impact on the road and neighborhood while construction is taking place. All entrances shall be constructed prior to any excavation taking place. All construction vehicles shall be parked outside of the public rights-of-way and shall only enter and exit the property by means of the construction entrance. The owner of the property shall see that the street is clean of mud or debris which has been caused by the construction at the end of each day. Stormwater swales shall not be altered by any means during any part of the construction of the property, and silt fence shall be placed adjacent to the stormwater swales to prevent any debris and/or alterations to the swales. Where stormwater tiles are required under a driveway, they shall be constructed to be flush with the bottom of the stormwater swales to allow the water to keep flowing through the swale. If a stormwater swale is altered or damaged during construction, the property owner will be responsible for reconstructing the swale as per the approved plan and will bear the expense of the Township Engineer visiting the site to determine if the swale was constructed as per the approved plans.

C. Driveways.

1. Permitting.

   a. No person, firm or corporation shall grade, construct, reconstruct, install, erect or replace a drain, culvert, drive or driveway, or other means of either affecting the discharge or passage of water or providing ingress or egress onto or along an official Township road, or any road or street in an approved Subdivision within the Township which is to be dedicated for public use, unless and until such person, firm or corporation secures approval and a permit from the Township.

   b. Application for such a permit shall be on forms provided by the Township. There shall be attached to each application a drawing or plan adequately illustrating the outlines of the property affected with existing improvements thereon, the proposed improvements to be added, the direction of surface water runoff, and the existing roadway and drainage features within the Township's right-of-way which are affected by the proposed improvements. For commercial and industrial driveways the applicant shall also submit engineering calculations identifying the area and volume of runoff based upon a two-year storm frequency with drainage facilities designed accordingly.

   c. The Board of Supervisors or its designated official may alter plans filed with an application, and specify changes or modifications as deemed necessary, and make its approval of an application subject to such changes or modifications.

2. Pre-existing access or drives.

   a. Permitted driveways in place at the time of the adoption of this Article that do not conform to the standards herein shall be designated as pre-existing driveways or accesses. They shall be brought into compliance with the applicable standards contained herein under the following conditions:

      1) New permits are requested for drives/access.
      2) Modification to an existing driveway.
      3) The property owner or applicant applies for a change in property use and will generate more vehicle trips than the existing use, or
      4) An expansion of the existing use will result in an increase in trip generation.

3. Driveway standards. The following general requirements shall be applicable to all driveway and related drainage construction:

   a. Each lot created shall have access to a public road.

   b. Location.

      1) Except for joint-use driveways, no driveway shall be located within twelve (12) inches of any portion of the side property line.
      2) Driveways shall not cross the street right-of-way within five (5) feet of a fire hydrant, catch basin or drain inlet.
      3) Driveways shall be located in safe relationship to sight distance and barriers to vision. PA Code Title 67, Transportation Chapter 441 (or other applicable PennDOT regulations) criteria shall be used to determine if the location is suitable for sight distance.

   c. Shared Access. Shared accesses are encouraged when practicable. When a new access is proposed along Williamsport Pike, Route 11, or Route 16; shared accesses shall be planned for and provided.

   d. Joint and Cross Access Drives. Joint and Cross Access Drives shall be required and planned for all non residential driveways as follows:

1) Access drives shall allow circulation between sites wherever feasible.
2) The drive speed shall be posted at 10 MPH having a sufficient width to accommodate two-way traffic.
3) Signage for safety and traffic control shall be installed and maintained by the property owner(s).
4) Property owners utilizing joint or cross access drives shall record an easement with the deed allowing cross access to and from other properties served by the driveway.
5) Property owners utilizing joint use or cross access drives shall record an agreement with the municipality so that future access rights along the driveway shall be granted at the discretion of the municipality and the design shall be approved by the municipal engineer.
6) Property owners utilizing joint use or cross access drives shall record a joint agreement with the deed defining the maintenance responsibilities of each of the property owners located along the drive or access.

e. Outparcels shall be served by an internal road or access drive that is separated from the main roadway. All necessary easements and agreements shall be required to be reviewed and approved by the Township solicitor to ensure rights of access and maintenance responsibilities.

f. Construction.
1) Where roadway curbs occur, approaches at the curb line shall be installed one and one-half (1 ½) inches above the adjacent roadway or gutter curb
2) Driveways serving residential use properties shall be a minimum of twelve (12) feet in width and a maximum of twenty four (24) feet. A minimum five (5) foot radius at the entrance is required.
3) Driveways serving nonresidential use properties shall follow PA Code Title 67, Transportation Chapter 441 (or other applicable PennDOT regulations) for standards for width and radius.
4) Where open shoulders or berms occur, the grade of entrance and exit of the driveway shall slope away from the roadway pavement at a rate of not less than one-quarter (1/4) of an inch per foot or not more than one (1) inch per foot for a distance equivalent to the prevailing width of the shoulder.
5) The rate of slope of approach ramps should not exceed one (1) inch per foot.
6) The center line of each driveway entrance shall be at a ninety-degree angle to the center line of the public road at the driveway entrance or as near thereto as site conditions permit.
7) Residential driveways shall be a paved surface with a four (4) inch minimum depth within the road right-of-way.
8) All nonresidential driveways shall be paved in accordance with Antrim Township specifications for road construction within the Township right-of-way and in accordance with PennDOT Specifications Publication 408 for road construction within the State right-of-way.
9) All nonresidential driveways intended for use by the public shall be paved in their entirety.

10) All driveways shall be constructed so as not to impair drainage within the right-of-way, alter the stability of the improved area or change the drainage of the Township road and adjacent areas.

11) Where a drainage ditch or swale exists, a pipe of adequate size shall be installed under the driveway. Drainage pipe(s) installed under driveways shall be a minimum of fifteen (15) inches in diameter (circular or equivalent sized arch), or suitable size based on field conditions and approved by the Township.

g. Acceleration and Deceleration Lanes. When deemed necessary to permit safe ingress and egress, acceleration and deceleration lanes paralleling the street shall be installed at the expense of the property owner. PA Code Title 67, Transportation Chapter 441 (or other applicable PennDOT regulations) criteria shall be used to determine if these lanes are warranted.

D. Parking and loading/ unloading areas.

1. Off street loading/unloading and parking shall be provided and maintained in accordance with this chapter for any new, changed, or modified use or when a building is constructed, enlarged, or altered.
2. Loading/ unloading and parking areas shall not be used for storage, sale items, or anything other than its intended purpose.
3. When parking is shared, the total number of spaces shall equal the cumulative required number for each use. The parking area shall be reasonably located to gain access to each use. An agreement for maintenance of the area shall be established and is subject to review and approval by the Township solicitor. Reduced parking may be granted by the Township upon written request when the parking analysis reflects that the uses sharing parking have different peak times.
4. Size of spaces. The minimum parking stall width shall be ten (10) feet. The minimum length shall be twenty (20) feet. All parking aisles shall have a minimum width of twenty five (25) feet for ninety-degree parking, and a minimum width of twenty (20) feet for two-way angle parking. One-way angle parking shall have a minimum aisle width of fifteen (15) feet. The stall size shall be measured from the narrowest, shortest points when angled.
5. Parking Analysis. The number of off-street parking spaces to be provided for each use shall be sufficient to accommodate all the occupants, employees, visitors, and customer parking. A parking analysis shall be submitted for review and approval by the Township which includes, but shall not be limited to, the estimated number of employees, patrons (peak and off peak hours or times of year), occupancy level, hours of operation, and size of building. Handicap spaces shall be part of the analysis and shall be determined in accordance with ADA. Supporting documentation of the numbers or counts used in the analysis shall be submitted for accuracy and justification. When parking is proposed to be shared, all uses shall be part of the analysis. Antrim Township has the right to require additional information to justify the number of spaces proposed. A parking analysis shall not be required for residential uses when 2 spaces per unit are provided.
6. Parking Landscape requirements.
   a. All parking areas greater than seven (7) spaces shall be landscaped to the minimum requirements.
   b. All landscaping shall comply with subsection §125-15(F)(2) above.
   c. At least one (1) canopy (shade) tree for every eight (8) parking spaces or fraction thereof, located in internal planting islands at least eight (8) feet in width, shall be provided.

d. A maximum of fifteen (15) consecutive and contiguous parking spaces in a row shall be allowed without being separated by a landscaped island.
e. Every fourth row of parking spaces shall be separated by a median strip at least eight (8) feet in width for landscaping, pedestrian purposes, or combination of both. One (1) large canopy tree shall be planted in this median for every forty-five (45) feet at a minimum.

7. Illuminations. Such parking areas shall be appropriately illuminated and shall comply with the following:
   a. A photometric plan shall be required.
   b. Lighting provided shall not be less than one-half (0.5) foot-candles or greater than fifteen (15) foot-candles at any point in the parking area.
   c. No more than one-half (0.5) foot candles shall be permitted at any property line.
   d. Shielding. All light sources shall be shielded around the light source and carefully directed and placed to prevent the lighting from creating a nuisance to adjacent properties or roadways.
   e. Down directed lighting shall be used.
   f. Lighting shall be on a photo cell or other timing mechanism to ensure lighting is adequate from dusk to dawn during operating hours
8. Drainage and surfacing. All multifamily, commercial and industrial public parking areas shall be paved with a durable and dustless surface and shall be so graded and drained to dispose of all surface water anticipated within the area.
9. Circulation. All dead-end parking lots shall be designed to provide sufficient backup area for the end stalls. Parking areas shall be designed so that each vehicle may proceed without requiring the moving of any other vehicle.
10. Setbacks. No parking areas shall be closer than six (6) feet to the principal multifamily, commercial or industrial building or to the side or rear lot line. When parking is shared, the setback is zero for that common lot line. Parking areas shall be physically separated from any public cartway by a minimum of a ten (10) foot landscape area and in no case shall parking areas be designed to require or encourage vehicles to back into the public street.
11. Loading and unloading areas shall:
    a. comply with the setbacks for parking areas and shall not be permitted within the road right of way.
    b.be provided to minimize interference with customer and pedestrian traffic.
    c. be designed to accommodate the maximum number of deliveries expected at one time and sized to accommodate the largest size truck expected for deliveries.

E. Curbs, sidewalks, and shared use trails.
1. Curbs.
   a. Curbs are not required and shall not be used unless necessary. Open swales are encouraged to handle stormwater runoff.
   b. Curbs, when used, shall be designed in a manner to allow stormwater to exit the roadway during all phases of construction.
   c. Curbs shall be located at the edge of the pavement.
   d. Curbs shall be constructed according to the standards set forth in the most recent edition or revision to PennDOT Specifications, Form 408.
2. Sidewalks.
   a. Existing sidewalks shall be maintained and are subject to the regulations in § 125-17(E)(5).

b. Sidewalks may be used by developers when trails are not required by §125-17(E)(3).
c. Sidewalks shall be constructed and or repaired in accordance with Penn DOT regulations.
d. Sidewalks shall be replaced with Shared Use Trails whenever a property makes improvements requiring Land Development plans, modifications are made to the site and/or existing improvements are replaced.

3. Shared Use Trails.
   a. Shared Use Trails shall be required whenever there is an average of five (5) or more lots or dwelling units per acre in a development and/or when designated on the official map. Shared Use Trails shall be required in Community Commercial and Highway Commercial Zoning Districts regardless of the use.
   b. Shared Use Trails shall be continued where Shared Use Trails or sidewalks preexist in a development or along a street. The conversion shall be adequately planned for from the width of a preexisting sidewalk to a trail.
   c. Rest areas shall be provided as shown on the official map. Rest areas shall be off the travel lane of the trail and shall have a five (5) foot clear area for wheel chairs or bikes and at least one (1) commercial grade bench. The minimum length of the rest area shall be eight (8) feet and the minimum width shall be four (4) feet.
   d. Shared use trails shall be eight (8) feet in width and paved with either asphalt or concrete in accordance with Exhibit H.
   e. Grades. Grades shall be a minimum of 1% and a maximum of 5%.
   f. Changes in level between adjacent surfaces. Any changes in level between adjacent surfaces shall meet ADA requirements.
   g. Inlets and drainage structures within or directly adjacent to a shared use path shall use bicycle rated grates and covers.
   h. The sidewalk or trail material shall continue across private accesses or drives,
   i. Access shall be provided at intervals not greater than every four-hundred (400) feet to streets from sidewalks or trails and at every intersection. Access shall provide safe crossing across open swales.
   j. Safety Signage or markings. Trail stop signs shall be provided where trails intersect streets. Pavement markings shall be provided at every crossing.
   k. Safety rail, a minimum of forty-two (42) inches in height, along sidewalks or trails shall be required when slopes exceed thirty-three (33) percent and two and one half (2 ½) feet in depth from the top of sidewalk or trail to bottom of slope or swale. Safety rail shall not be required when there is a minimum separation of two (2) feet from the top of the slope to the edge of the sidewalk or trail.
4. Location. Sidewalks and trails shall be constructed at the right-of-way line.
5. Ownership and maintenance of curbs, sidewalks and trails.
   a. Abutting property owners to curbs, sidewalks, and trails shall own and maintain them.
   b. Construction and repair required. Antrim Township may require owners of property along any street, including state highways, to construct, pave, repave and keep in good repair the sidewalk, trail, curb, tile, and gutter along such property, at such grades and under such regulations as may be prescribed by ordinance.
   c. Upon failure of any property owner to construct, pave, repave or maintain any sidewalk, trail, curb, tile, or gutter in compliance with the notice to do so, Antrim Township may do

the same or cause the same to be done and may levy the costs of its work on such owner as a property lien to be collected in a manner provided by law.

d. Emergency repairs. Where in the opinion of the Township a dangerous sidewalk, trail or curb condition exists, the Township shall send such property owner notice by registered or certified mail stating emergency repairs are required. Upon failure of such owner to comply with the notice within two (2) days after receiving it, the Township may make emergency repairs and levy costs of its work on such owner as a property lien to be collected in the manner provided by law.

e. Construction and repair done on owner's initiative without notice. Any property owner not required by notice to construct, pave, repave or keep in repair sidewalks, trail, curb, tile or gutters may construct, pave, repave or repair the sidewalk, trail, curb and gutter abutting their property, provided such owner shall make application to the Township before commencing work, shall conform to the provisions of this section and other regulations as to specifications for construction and repair work, and shall notify the Township within two (2) days after completion of his work.

§ 125-18 Building numbers.

A. It shall be the duty of each and every owner, trustee, lessee or agent and occupant of each and every house, building, or other structure to cause the same to be numbered in accordance with this section.
B. Building numbers shall be assigned to each lot by the Township.
C. Building numbers shall be shown on the Subdivision plans and/or Land Development plans and shall be indicated on each existing or proposed building.
D. The numbers shall be mounted in a conspicuous place on every house or building and on both sides of the mailbox or on a reflective sign for the house or building, so that said numbers can be readily seen and read while traveling from either direction on the street or highway.
E. Each number shall be a minimum of four (4) inches in height.
F. It shall be unlawful to cover or conceal any number.

§ 125-19. Traffic lights, traffic control signage, markings, traffic studies and street lighting.

A. Traffic Impact Study (TIS)
   1. A Traffic Impact Study shall be required when AM or PM peak hour trips exceed 50 based on the most current edition of the Institute of Transportation Engineers trip generation manual.
   2. Traffic Studies warranted by Penn DOT shall be submitted to Antrim Township. The Township shall have the right to review and comment to Penn DOT on such scope and warrants of such studies.
   3. The TIS scope of work shall be generated by the Township. Such scope shall consider existing traffic problems on existing surrounding roadways, level of service on nearby roadways and the impact this road may have on it, the anticipated impact on the surrounding area, the proximity to other site driveways or intersection, and all other items deemed necessary by the Township.
   4. When a traffic study is warranted, the driveway throat length shall be analyzed to ensure a safe distance is established for vehicles entering the site before encountering conflicts created by internal intersections.

B. Traffic Control .

1. Analysis. When AM or PM peak hour trips exceed 50 based on the most current edition of the Institute of Transportation Engineers trip generation manual, the developer of any Subdivision or Land Development shall prepare necessary analysis and reports supporting signage, street lighting, or pavement marking locations or that supports the position that signage or pavement markings are not needed .
2. Signs. The Township will order all signs. The developer shall reimburse the Township for such costs. The signs will be installed by the Township after the Township is reimbursed for such costs. Signs shall be installed as soon as the road surface is improved to a mud-free condition.
3. Markings/ striping. The developer shall be responsible for the pavement markings, including travel lane/shoulder separation striping within the Subdivision, in accordance with PennDOT Specifications Publication 68 (or other applicable regulations).
4. Traffic Lights.
   a. All traffic lights shall be designed to the Township's satisfaction.
   b. Agreements.
      1) An agreement is required between the developer/property owner and the Township agreeing to the reimbursement of the ongoing maintenance and or replacement cost of such light(s).
      2) All costs associated with such lights (repairs, maintenance, electric etc) shall be reimbursed to the Township by the property owner who required the installation of such light.
   c. Specifications. The following equipment shall be designed for and installed:
      1) Econolite Asc/3 Controllers
      2) Polycarbonate signal housing
      3) Optical pre-emption
      4) L.E.D. lights.
      5) Video Detection
      6) Fiber-optic interconnect where interconnect is required.
      7) Additional items as required by the Township, their engineer, or signal vendor.
5. Streetlights.
   a. Streetlights shall not be installed unless approval from the Board of Supervisors has been obtained.
   b. Documentation shall be submitted for review supporting the need of such streetlight.
   c. An agreement shall be made between the requestor of the streetlight and the Township for operation and maintenance of said streetlight before approval by the Board.
   d. The Township shall be reimbursed by the requestor for all costs associated with the approval, installation, and maintenance costs including, but limited to the electric costs for said light.
   e. Streetlights shall be installed in rights-of-way, designed as per the power company specifications.

§ 125-20. Monuments and markers.

Generally all work shall conform to standards put forth by the American Congress of Surveying and Mapping and the following minimum standards:

A. Monuments. Monuments shall be six (6) inches square or four (4) inches in diameter, thirty (30) inches long and made of concrete, stone, or by setting a four (4) inch cast iron or steel pipe filled with concrete. Two (2) monuments shall be set when a development of five (5) lots or more is proposed.
B. Markers. Markers shall be 5/8 of an inch round with a cap and a minimum of fifteen (15) inches long. Markers shall be made of iron or steel bars. Markers shall be set at all lot corners except those set with monuments.

ARTICLE V, Mobile Home Park Regulations

§ 125-21 Land Development/ Subdivision required.
No person, firm or corporation shall construct, expand, maintain or operate a mobile home park within the Township without obtaining approval for a Land Development/ Subdivision plan.

§ 125-22. Procedures for plan review.
The procedures for reviewing mobile home park plans shall be the same as for Subdivision and Land Development plans in accordance with the provisions of this chapter.

§ 125-23. Lot requirements.
A. New mobile home parks shall contain at least ten (10) acres and shall contain a minimum of ten (10) mobile home spaces.
B. Individual mobile home lots located in a mobile home park shall remain as part of the mobile home park and shall not be subdivided off separately.

§ 125-24. Yard and setback requirements.
A. All mobile homes shall be located at least thirty-five (35) feet from any street right-of-way which abuts a mobile home park boundary and at least fifty (50) feet from any other boundary of the park. A twenty (20) foot green strip planted with screening, as defined in this chapter shall be required.
B. There shall be a minimum distance of twenty-five (25) feet between an individual mobile home and adjoining pavement of a park street or common parking area or other common areas or another mobile home pad.
C. No mobile home patio, deck, accessory or other structure shall be located closer than ten (10) feet to another mobile home pad.

§ 125-25. Structural additions.
All structural additions to mobile homes, other than those which are built into the unit and designed to fold out or extend from it, shall be erected only after a land use permit and/or building permit has been obtained, and such additions shall conform to any building code of the Township, where applicable, or shall meet the standards of special regulations adopted with respect to such additions.

§ 125-26. Park street system.
A. Park access. Each mobile home park shall be provided with at least two (2) points of ingress and egress and a distance of at least one-hundred-fifty (150) feet shall be maintained between center lines of access streets.

B. Mobile Home access. All mobile home parks shall be provided with safe and convenient paved access streets to and from each and every mobile home.
C. Streets. All streets within any mobile home park shall be designed and improved as minor streets in accordance with § 125-17. All mobile home pads shall be given building numbers by the Township and all park streets shall be given names approved by the Township.

§ 125-27. Required off-street parking.
A. Off-street parking areas shall be provided in all mobile home parks for the use of park occupants and guests. Such areas shall be furnished at the rate of at least two (2) vehicular parking spaces for each mobile home pad.
B. Each off-street parking space shall contain at least two-hundred (200) square feet and shall not exceed a distance of one-hundred-fifty (150) feet from the mobile home pad that it is intended to serve.

§ 125-28. Utility improvements.
A. Mobile home facilities. No mobile home shall be placed in said park which does not contain a built-in bathroom with water closet, lavatory and shower or tub, kitchen and heating system, which are in working order.
B. Sewer and water. All mobile homes shall be connected to sewer and water systems approved by the Department of Environmental Protection and the Governing Municipal Authority.
C. Electrical distribution. All mobile home parks shall have underground electrical distribution systems which shall be installed and maintained in accordance with the local electric power company's specifications regulating such systems.
D. Refuse and recyclables collection facilities. The developer shall provide a plan detailing central locations throughout the park for refuse and recyclables collection. The park owner is responsible for refuse and recyclables collection at least once a week.
E. Liquefied petroleum gas system. Liquefied petroleum gas systems provided for mobile homes, service buildings or other structures shall include the following:
    1. Systems shall be provided with safety devices to relieve excessive pressures and shall be arranged so that the discharge terminates at a safe location.
    2. Systems shall have at least one (1) accessible means for shutting off gas. Such means shall be located outside the mobile home and shall be maintained in effective operating condition.
    3. All LPG piping outside of the mobile home shall be well supported and protected against mechanical injury. Undiluted liquefied petroleum gas in liquid form shall not be conveyed through piping equipment and systems in mobile homes.
    4. Any vessel containing liquefied petroleum gas shall be securely but not permanently fastened to prevent accidental overturning.
    5. No LPG vessel shall be stored or located inside or beneath any storage cabinet, carport, mobile home or any other structure.
F. Fuel oil supply system. All fuel oil supply systems provided for mobile homes, service buildings and other structures shall be installed and maintained in conformity with the following regulations:
    1. All piping from outside fuel storage tanks or cylinders to mobile homes shall be securely, but not permanently, fastened in place.
    2. All fuel oil supply systems provided for mobile homes, service buildings and other structures shall have shutoff valves located within five inches of storage tanks.

3. All fuel storage tanks or cylinders shall be securely placed and shall not be closer than ten (10) feet from any mobile home exit.
4. Storage tanks located in areas subject to traffic shall be protected against physical damage.
5. All fuel oil tanks, when applicable, shall be registered with the Commonwealth of Pennsylvania.

§ 125-29. Common Open Space.

A. All mobile home parks shall provide not less than ten percent (10%) of the total land area for common open space purposes. Common open space shall be so located as to be free of traffic hazards and should, where the topography permits, be centrally located and easily accessible to all park residents.

§ 125-30. Service, administration and other buildings.

A. Within a mobile home park, one (1) mobile home may be used as an administrative office. Other administrative and service buildings, housing sanitation and laundry facilities, or any other such facilities shall be of permanent structure complying with all applicable ordinances and statutes regarding buildings, electrical installations and plumbing and sanitation systems.

§ 125-31. Sale of mobile homes located within mobile home parks.

Individual mobile homes on a pad may be sold from the pad. Mobile home dealerships/ sales lots shall not be permitted except for in the appropriate zoning district.

§ 125-32. Fees.

The fee schedule for filing a Preliminary and Final Plan shall be in accordance with this chapter.

ARTICLE VI, Enforcement and Appeals

§ 125-33. Preventative remedies.

A. In addition to other remedies, the Township may institute and maintain appropriate actions by law or in equity to restrain, correct or abate violations, to prevent unlawful construction, to recover damages and to prevent illegal occupancy of a building, structure or premises. The description by metes and bounds in the instrument of transfer or other documents used in the process of selling or transferring shall not exempt the seller or transferor from such penalties or from the remedies herein provided.
B. The Township may refuse to issue any permit or grant any approval necessary to further improve or develop any real property which has been developed or which has resulted from a Subdivision of real property in violation of this chapter. This authority to deny such a permit of approval shall apply to any of the following applicants:
   1) The owner of record at the time of such violation.
   2) The vendee or lessee of the owner of record at the time of such violation without regard as to whether such vendee or lessee had actual or constructive knowledge of the violation.
   3) The current owner of record who acquired the property subsequent to the time of the violation without regard as to whether such current owner had actual or constructive knowledge of the violation.

4) The vendee or lessee of the current owner of record who acquired the property subsequent to the time of violation without regard as to whether such vendee or lessee had actual or constructive knowledge of the violation.

C. As an additional condition for issuance of a permit or the granting of an approval to any such owner, current owner, vendee or lessee for the development of any such real property, the Township may require compliance with the conditions that would have been applicable to the property at the time the applicant acquired an interest in such real property.

§ 125-34. Violations and penalties.

A. Any person, partnership or corporation who or which has violated the provisions of this chapter shall, upon being found liable therefore in a civil enforcement proceeding commenced by the Township, pay a judgment of not more than five-hundred dollars ($500) plus all court costs, including reasonable attorneys' fees incurred by the Township as a result thereof. No judgment shall commence or be imposed, levied or payable until the date of the determination of a violation by the District Justice. If the defendant neither pays nor timely appeals the judgment, the Township may enforce the judgment pursuant to the applicable rules of civil procedure. Each day that a violation continues shall constitute a separate violation, unless the District Justice determining that there has been a violation further determines that there was a good faith basis for the person, partnership or corporation violating this chapter to have believed that there was no such violation, in which event there shall be deemed to have been only one such violation by the District Justice, and thereafter each day that a violation continues shall constitute a separate violation.

B. The Court of Common Pleas, upon petition, may grant an order of stay, upon cause shown, tolling the per diem judgment pending a Final adjudication of the violation and judgment.

C. Nothing contained in this section shall be construed or interpreted to grant to any person or entity other than the Township the right to commence any action for enforcement pursuant to this section.

D. District Justices shall have initial jurisdiction in proceedings brought under this section.

§ 125-35. Appeals.

A. Any person aggrieved by provision, decision or order of the Board of Supervisors may appeal to the Zoning Hearing Board in accordance with the procedures contained in Chapter 150, Zoning.

B. Appeals to court shall be taken to the Court of Common Pleas of Franklin County.

ALL MATERIALS AND CONSTRUCTION TECHNIQUES SHALL BE IN STRICT ACCORDANCE WITH ALL PENNDOT STANDARDS AND SPECIFICATIONS

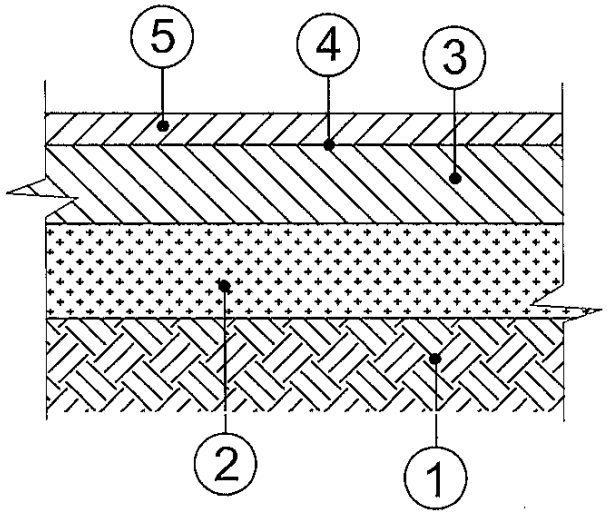

1. PREPARED SUBGRADE – 32' WIDE MINIMUM
2. 6" PENNDOT APPROVED 2A COARSE GRADED AGGREGATE–BASE (1 – 6" LIFT) 28' MINIMUM WIDTH
3. 4" HOT MIX ASPHALT SUPERPAVE 25.0 MM FOR BASE– PG 64–22, LEVEL 2 (ONE 4" LIFT)
4. TACK COAT IS REQUIRED BETWEEN LAYERS OF HMA IF MORE THAN TWENTY–FOUR HOURS PASS BETWEEN PLACEMENT OF THE BASE AND SURFACE COURSES. AT THE TOWNSHIP DISCRETION, TACK COAT MAY BE REQUIRED AFTER A SHORTER ELAPSED TIME PERIOD IF THE BASE COURSE IS EXPOSED TO HEAVY WEAR, INCLEMENT WEATHER, OR REQUIRES EXTENSIVE CLEANING.
5. 2" HOT MIX ASPHALT SUPERPAVE 9.5 MM FOR SURFACE– PG 64–22, LEVEL 2 (ONE 2" LIFT)

EXHIBIT A

RESIDENTIAL STREET PAVEMENT SECTION

CHAPTER 125–17 (A)(4)

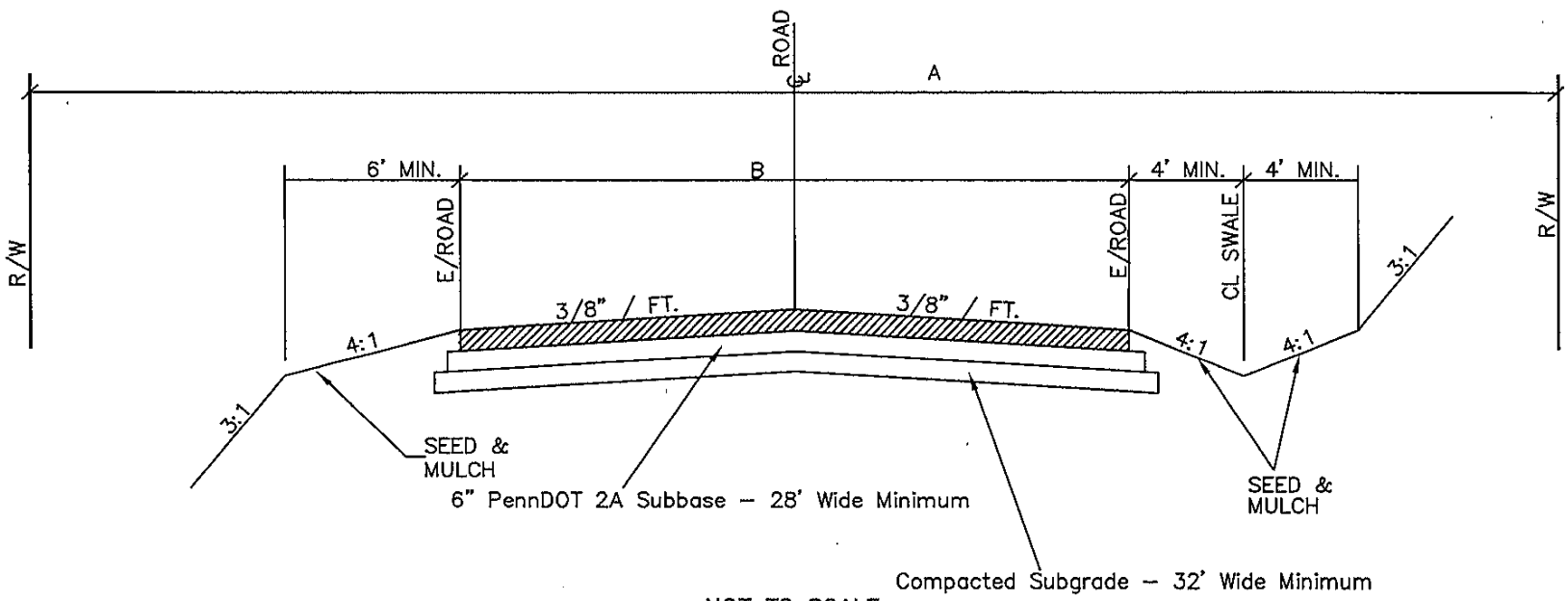

NOT TO SCALE

RESIDENTIAL STREETS

CLASS OF STREET	R–O–W WIDTH (A)	WIDTH OF PAVEMENT	WITH OF PAVEMENT WITH CURBS	ON STREET PARKING PERMITTED (8' WDIE)
RESIDENTIAL LOCAL ROAD	50'	20'	24'	YES
NEIGHBORHOOD COLLECTORS	50'	24'	26'	NO

EXHIBIT B

CHAPTER 125–17 (A)(4)

ALL MATERIALS AND CONSTRUCTION TECHNIQUES SHALL BE IN STRICT ACCORDANCE WITH ALL PENNDOT STANDARDS AND SPECIFICATIONS

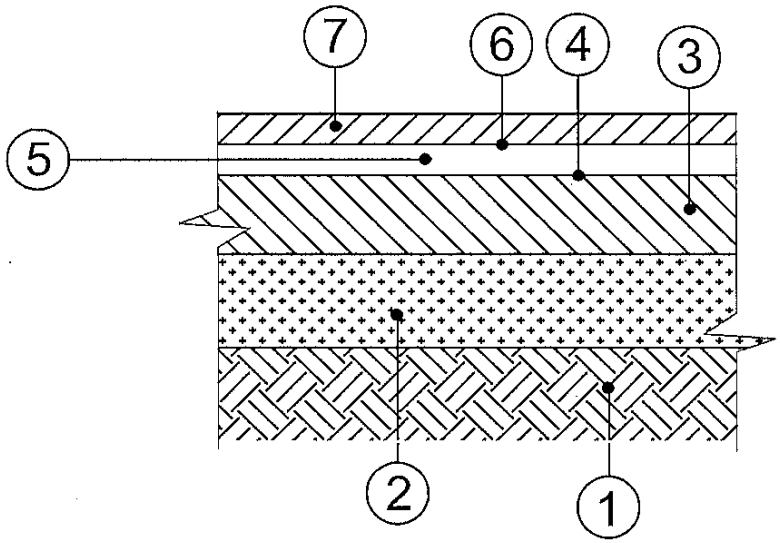

1. PREPARED SUBGRADE – 38' WIDE MINIMUM. (PROOF ROLL REQUIRED FOR EVERY 2' OF FILL)
2. 10" PENNDOT APPROVED 2A COARSE GRADED AGGREGATE–BASE (2 – 5" LIFTS) 36' MINIMUM WIDTH
3. 6" HOT MIX ASPHALT SUPERPAVE 25.0 MM FOR BASE– PG 64–22, LEVEL 2 (TWO 3" LIFTS)
4. TACK COAT IS REQUIRED BETWEEN LAYERS OF HMA IF MORE THAN 24 HOURS PASS BETWEEN PLACEMENT OF THE BASE AND SURFACE COURSES. AT THE TOWNSHIP DISCRETION, TACK COAT MAY BE REQUIRED AFTER A SHORTER ELAPSED TIME PERIOD IF THE BASE COURSE IS EXPOSED TO HEAVY WEAR, INCLEMENT WEATHER, OR REQUIRES EXTENSIVE CLEANING.
5. 2" HOT MIX ASPHALT SUPERPAVE 19.0 MM BINDER COURSE – PG 64–22, LEVEL 2 (ONE 2" LIFT)
6. TACK COAT IS REQUIRED BETWEEN LAYERS OF HMA IF MORE THAN 24 HOURS PASS BETWEEN PLACEMENT OF THE BASE AND SURFACE COURSES. AT THE TOWNSHIP DISCRETION, TACK COAT MAY BE REQUIRED AFTER A SHORTER ELAPSED TIME PERIOD IF THE BASE COURSE IS EXPOSED TO HEAVY WEAR, INCLEMENT WEATHER, OR REQUIRES EXTENSIVE CLEANING.
7. 2" HOT MIX ASPHALT SUPERPAVE 12.5 MM FOR SURFACE – PG 64–22, LEVEL 2 (ONE 2" LIFT)

EXHIBIT C

NON–RESIDENTIAL STREET PAVEMENT SECTION

CHAPTER 125–17 (A)(5)

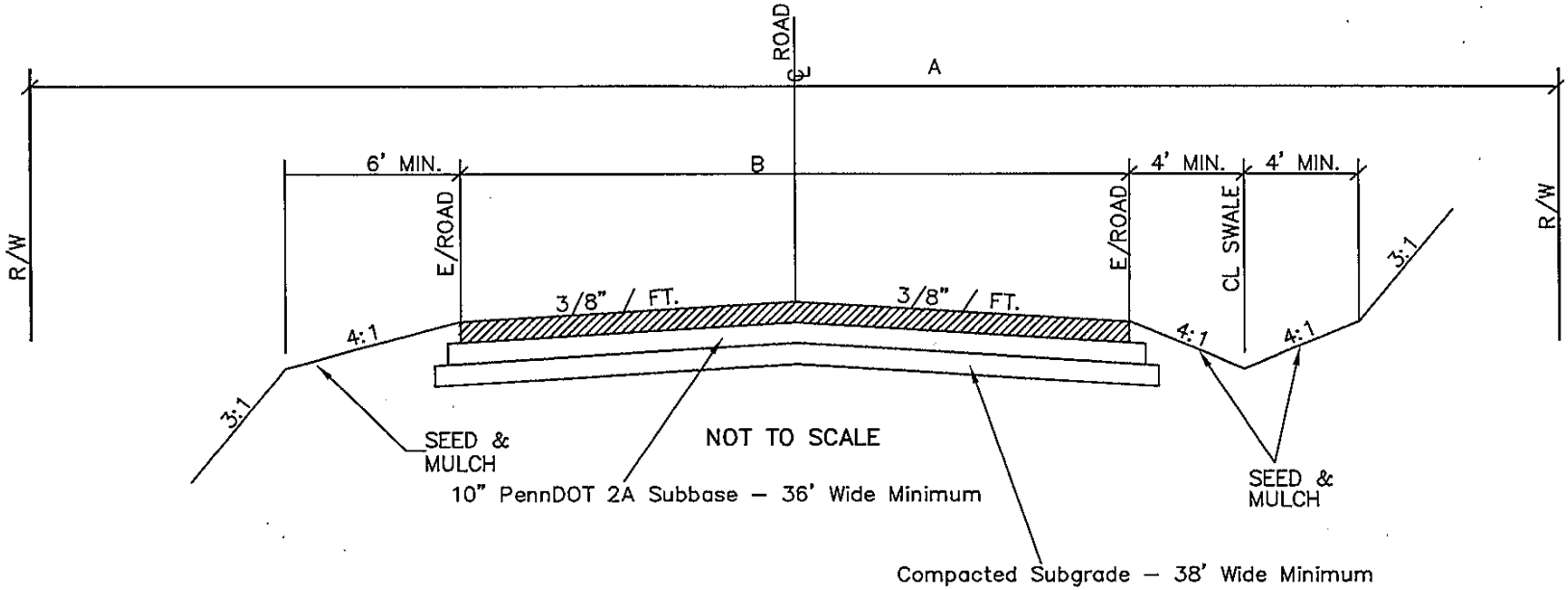

NON–RESIDENTIAL STREETS				
CLASS OF STREET	R–O–W WIDTH (A)	WIDTH OF PAVEMENT (B)	WITH OF PAVEMENT WITH CURBS	ON STREET PARKING PERMITTED (8' WDIE)
COMMUNITY COLLECTOR	50'	24'	26'	YES
COMMERCIAL	80'	28'	32'	YES
INDUSTRIAL	80'	32'	36'	NO
COMMUNITY ARTERIAL	80'	32'	36'	NO
REGIONAL ARTERIAL	80'	32'	36'	NO

EXHIBIT D

CHAPTER 125–17 (A)(5)

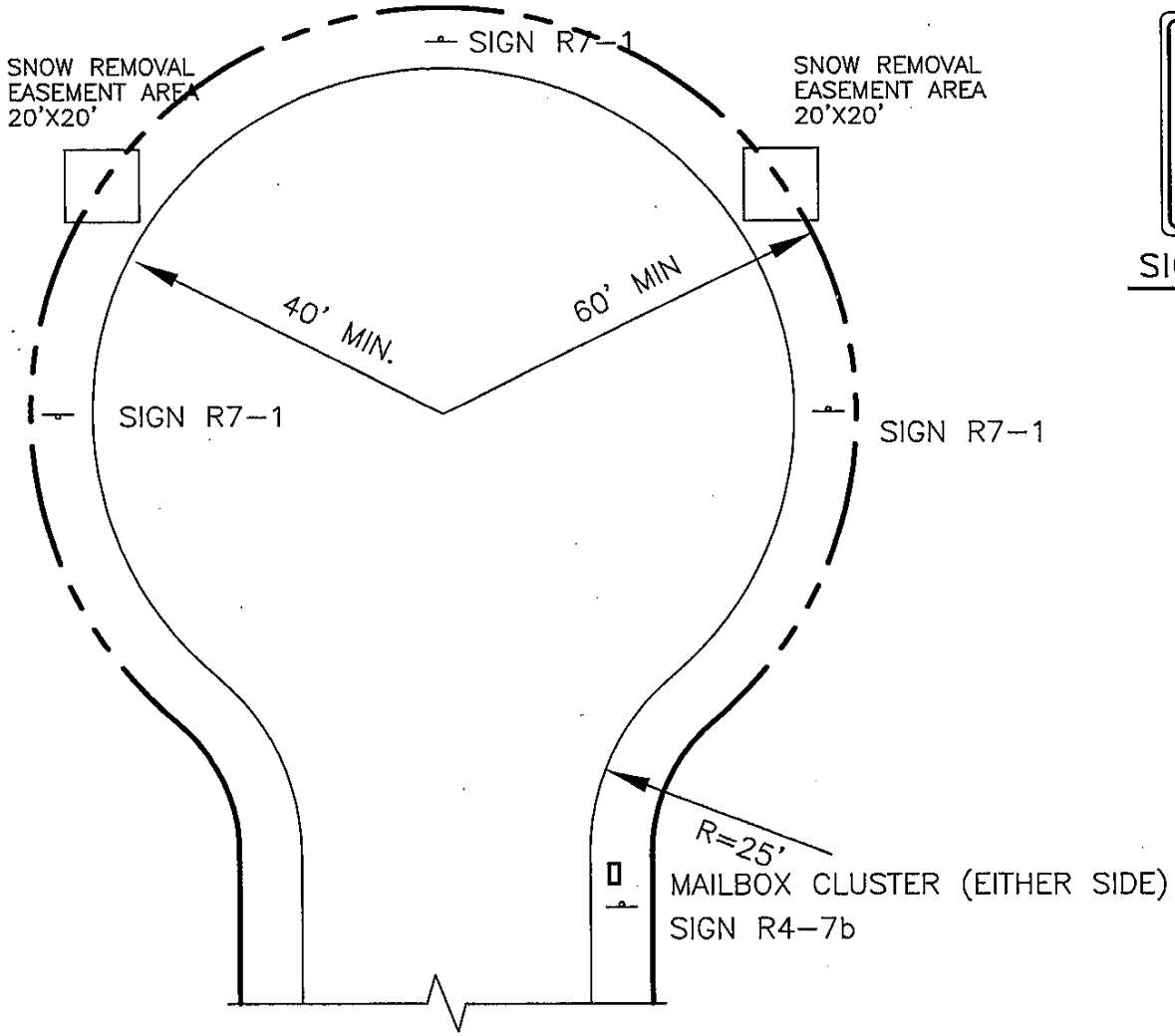

SIGN DETAIL

SIGN R4-7b

SIGN DETAIL

SIGN R7-1

EXHIBIT E

CUL-DE-SAC

CHAPTER 125-17 (A)(6)(a)(1)

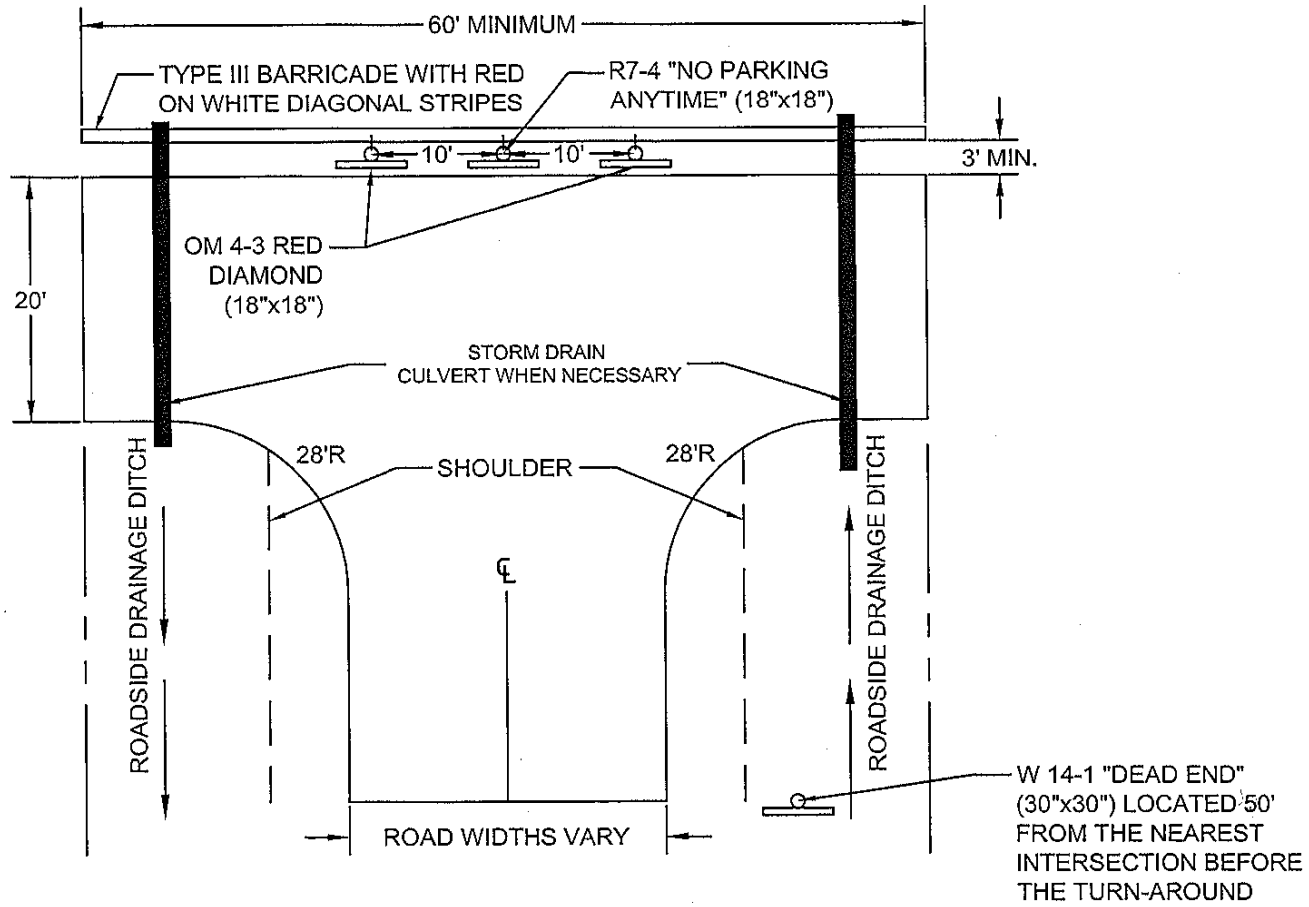

EXHIBIT F

TEMPORARY "T" TURN-AROUND

CHAPTER 125–17 (A)(6)b

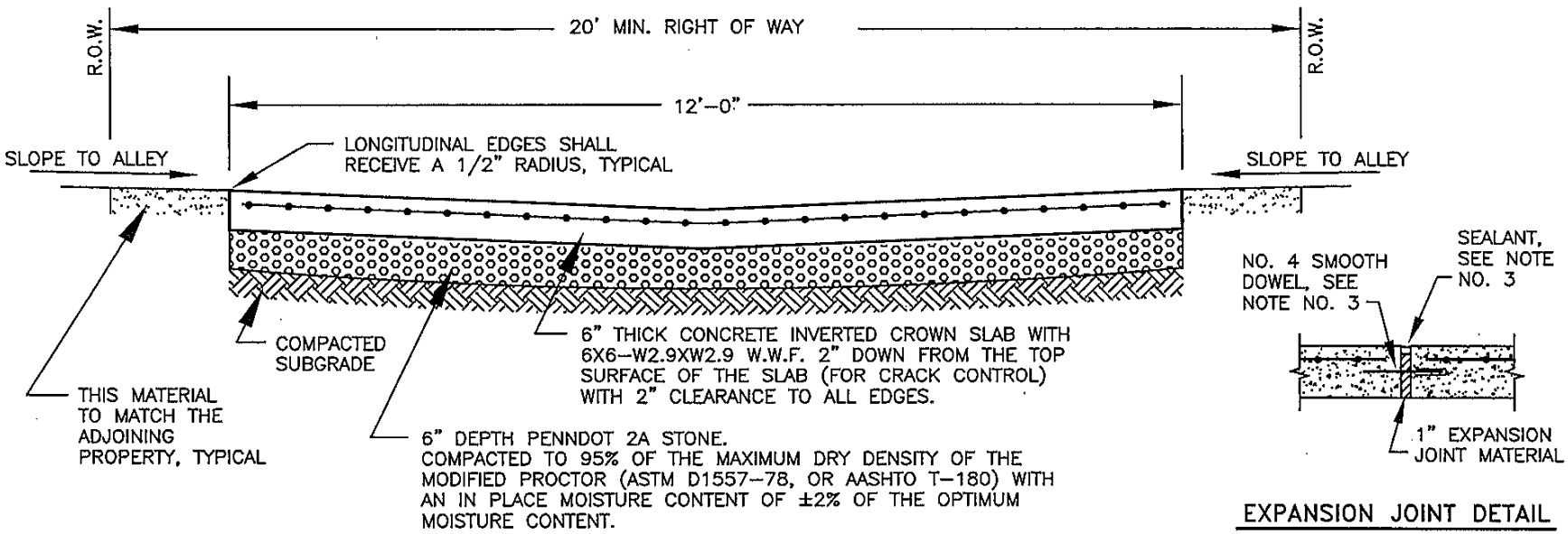

EXPANSION JOINT DETAIL

NOTES

1. ALL CONCRETE SHALL BE A 28 DAY COMPRESSIVE STRENGTH OF 4,500 P.S.I. WITH 5%-8% AIR ENTRAINMENT AND 2"-5" SLUMP. DO NOT ADD WATER TO THE SURFACE FOR FINISHING. ALL EXPOSED SURFACES SHALL RECEIVE A LIGHT BROOM FINISH.
2. THE CONCRETE ALLEY PAVEMENT SHALL RECEIVE A TRANSVERSE TOOLED JOINT OR SAW CUT JOINT EVERY 10'-0" MAXIMUM. THIS JOINT SHALL BE 1/8" WIDE X 3/8" DEEP. (IF SAW CUT FILL WITH A TWO PART ELASTOMERIC GUN-GRADE POLYSULFIDE SEALANT, SONNEBORN SONOLASTIC OR AN APPROVED EQUAL).
3. THE CONCRETE ALLEY PAVEMENT SHALL RECEIVE A TRANSVERSE EXPANSION JOINT EVERY 40'-0" MAXIMUM. THIS JOINT SHALL HAVE 1" EXPANSION JOINT MATERIAL AND 12" LONG NO. 4 SMOOTH DOWELS AT MID-DEPTH IN THE SLAB AT 12" O.C. WITH A GREASED CAP ON ONE END, WITH 6" OF THE DOWEL ON EITHER SIDE OF THE JOINT. THIS JOINT SHALL BE FINISHED OUT WITH 1/2" DEPTH TWO PART ELASTOMERIC GUN-GRADE POLYSULFIDE SEALANT SONNEBORN SONOLASTIC OR AN APPROVED EQUAL.
4. WHERE TWO RESIDENTIAL ALLEYS INTERSECT, THE PAVEMENT AT THE INTERSECTION SHALL HAVE A 10'-0" RADIUS AND THE ALLEY RIGHTS OF WAY SHALL HAVE A 10'-0" RADIUS. DEAD-END ALLEYS SHALL HAVE A TURN AROUND IN ACCORDANCE WITH AASHTO.

EXHIBIT G

PUBLIC ALLEY

CHAPTER 125-17 (A)(6)c

ALL MATERIALS AND CONSTRUCTION TECHNIQUES SHALL BE IN STRICT ACCORDANCE WITH ALL PENNDOT STANDARDS AND SPECIFICATIONS

1. PREPARED SUBGRADE – 10' WIDE MINIMUM
2. 6" PENNDOT APPROVED 2A COARSE GRADED AGGREGATE–BASE (1 – 6" LIFT) 9' MINIMUM WIDTH
3. 3" HOT MIX ASPHALT SUPERPAVE 9.5 MM FOR SURFACE – PG 64–22, LEVEL 2 (ONE 3" LIFT)

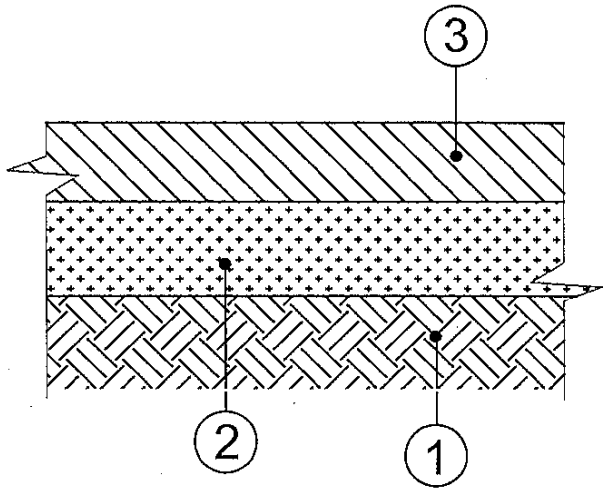

ASPHALT

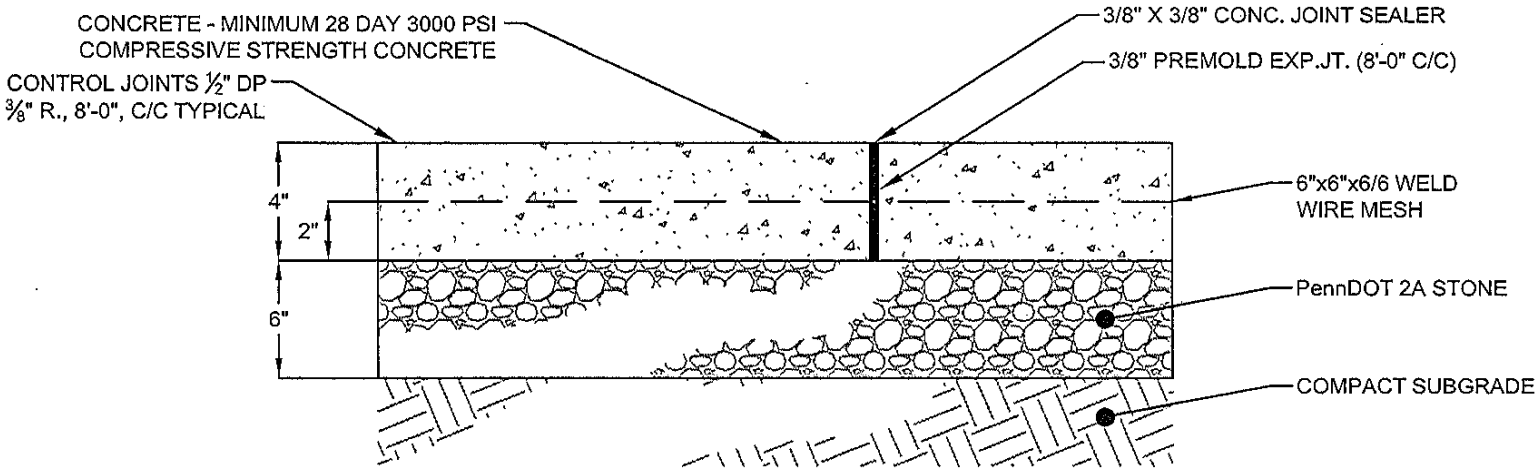

NOTES:

1. CLASS P-I AIR ENTRAINED CONCRETE
2. SIDEWALK TO HAVE 3/8" CONTRACTION JOINTS SCORED AT 5'-0" INTERVALS.
3. CONSTRUCT 3/8" EXPANSION JOINTS SPACED EVERY 20' AND BETWEEN CURB AND SIDEWALK WHERE ADJACENT.
4. SIDEWALK TO BE BRUSH FINISHED

CONCRETE

EXHIBIT H

SHARED USE PATH PAVEMENT SECTION

CHAPTER 125–17 (E)(3)d

SECTION 5 – Chapter 150 entitled "Zoning" shall be repealed in its entirety and replaced with a new Chapter 150 entitled "Zoning". The new Chapter 150 entitled "Zoning" shall read as follows:

ARTICLE I, General Provisions

§ 150-1. Objectives.
There is hereby established a Comprehensive Zoning Plan for the Township, which plan is set forth in the text and map that constitutes this chapter. Said plan is adopted in the interest of protecting and promoting the public health, safety, morals and general welfare, and shall be deemed to include the following related and specific community development objectives, among others as may be stated in the Antrim Township Comprehensive Plan:

A. To guide and regulate the orderly growth, development and redevelopment of the Township, in accordance with a Comprehensive Plan of long-term objectives, principles and standing deemed beneficial to the interest and welfare of the people.
B. To protect the establishment, character, and the social and economical well-being of both private and public property.
C. To promote, in the public interest, the utilization of land for the purposes for which it is most appropriate, and to provide maximum protection of residential areas.
D. To encourage economic development in appropriate areas.
E. To encourage agricultural operations in appropriate areas.
F. To secure safety from floods, water pollution, and other dangers, and to provide adequate light, air, and convenience of access.
G. To encourage and facilitate the provision of adequate and efficient public facilities, service, and utilities.
H. To lessen and, where possible, to prevent traffic congestion on public streets and highways so as to promote efficient and safe circulation of vehicles and pedestrians.
I. To encourage historic preservation.
J. To conserve the value of buildings and to enhance the value of land throughout the Township.
K. To preserve rural qualities of open lands.

§ 150-2. Interpretation; conflicts with other provisions.
In their interpretation and application, the provisions of this chapter shall be held to be the minimum requirements adopted for the promotion of the public health, safety, comfort, convenience, and general welfare. Except where specifically provided to the contrary, it is not intended by this chapter to repeal, abrogate, annul or in any way to impair or interfere with any rules, regulations or permits previously adopted or issued or which shall be adopted or issued pursuant to law relating to the use of buildings, structures, shelter or premises; nor is it intended by this chapter, to interfere with or abrogate or annul any easements, covenants or other agreements between parties; provided, however, that where this chapter imposes a greater restriction upon the use of a building or premises, or required larger restrictions upon the use of a building or premises, or requires larger spaces than that imposed or required by any other statute, ordinance, rule, regulation or permit, or by any easement or agreement, the provisions of this chapter shall control.

ARTICLE II, Terminology

§ 150-3. Word usage.
Words used in the present tense include the future tense. The singular includes the plural. The word "person" includes an individual, a corporation, a partnership and incorporated association or any other similar entity. The word "lot" includes the words "plot" or "parcel." The term "shall" is always mandatory. The word "used" or "occupied" as applied to any land or building shall be construed to include the words "intended, arranged or designed to be used or occupied."

§ 150-4. Definitions.
ACCESSORY BUILDING or STRUCTURE - A building subordinate to and detached from the main building and located on the same lot with such principal use or structure
ACCESSORY DWELLING UNIT- A dwelling either attached or detached from the principal dwelling or accessory structure providing a room or rooms used for living and sleeping purposes and having a kitchen and bathroom(s) arranged for occupancy by one family.
ACCESSORY USE - A use customarily incidental and subordinate to the principal use of the main building and located on the same lot with such principal use or main building.
ADULT MATERIALS - Adult materials shall include, but not be limited to, any literature, books, magazines, pamphlets, newspapers, papers, comic books, drawings, articles, computer or other images, motion pictures, mechanical devices, instruments, clothing or any other writings, materials or accessories that are distinguished or characterized by their emphasis on matter depicted, described or related to "specified sexual acts" or "specified anatomical areas" as defined herein, or an establishment with a segment or section exclusively devoted to the sale, lease, gift, trade, display of such materials or of any drug paraphernalia.
ADULT-ORIENTED BUSINESS - Use of a building, structure or property, or part thereof, for a business that has adult materials in a section or segment devoted to such materials or as substantial or significant portion of its stock-in-trade for the purposes of sale, lease, trade, gift or display of such adult materials. For the purposes of this chapter, adult-oriented businesses shall also mean and include any massage parlor, nightclub, bar, tavern, restaurant, eating and drinking establishment, arcade, theater, motel, hotel, or any other establishment that regularly features, for economic gain or other consideration, entertainment in any form that is characterized by nudity or the depiction or display of sexual activities.
AGRICULTURALLY RELATED OPERATION - A principal use that may, or may not, be located upon a farm, at which goods and services are provided in support of local farming operations. Sawmills and similar uses shall be considered agriculturally related.
AGRICULTURE - The raising of crops, horticulture, gardening, silviculture, and animal husbandry.
ALLEYS - A thoroughfare other than a side street which affords only a secondary means of access to abutting property and not intended for general traffic circulation.
ALTERATIONS - As applied to a building or structure, a change or rearrangement in the structural parts or in the existing facilities, or an enlargement, whether by extending on a side or by increasing height, or the moving from one location or position to another.
ALTERATIONS, STRUCTURAL - Any change in the supporting members of a building, such as bearing walls, columns, beams or girders.
AMUSEMENT BUSINESS - An amusement enterprise offering entertainment, recreation, or games of skill to the general public for a fee or charge.

ANIMAL HOSPITAL - A building used for the treatment, housing or boarding of animals by a licensed veterinarian
APARTMENT - A dwelling unit within a multiple dwelling. This classification includes apartment houses, apartment hotels, bachelor apartments, studio apartments and kitchenette apartments.
APPLICATION FOR DEVELOPMENT - Every application, whether preliminary, tentative or final, required to be filed and approved prior to start of construction or development, including but not limited to an application for a building permit, for the approval of a subdivision plat or plan or for the approval of a development plan.
APPROVED STREET TREE LIST - A list of trees approved initially by resolution of the Antrim Township Board of Supervisors and may be modified by resolution of the Board.
ARCHEOLOGICAL PROPERTY - A property that has any artifacts, remains, objects or any other evidence of historic or anthropological value located on the property, whether found above or below the surface of the earth.
AREA, BUILDING - The total of areas taken on a horizontal plane at the main grade level of the principal building and all accessory buildings, exclusive of uncovered porches, terraces and steps
BASE FLOOD - A flood that has a one percent chance of being equaled or exceeded in any given year (also called the "100 year flood").
BASE FLOOD ELEVATION (BFE) - The elevation shown on the Flood Insurance Rate Map (FIRM) for Zones AE, AH, A1-30 that indicates the water surface elevation resulting from a flood that has a 1-percent or greater chance of being equaled or exceeded in any given year.
BASEMENT - Any area of the building having its floor below ground level on all sides.
BED-AND-BREAKFAST - An owner-occupied single-family detached dwelling where not more than six bedrooms are rented to overnight guests on a daily basis for periods not exceeding one week.
BLOCK - An area bounded by streets
BOARD - Any body granted jurisdiction under a land use ordinance or under this chapter to render final adjudications.
BOARDING HOUSE - A building, other than a hotel or motel, where, for compensation and arrangement, meals or lodging and meals are provided for five or more persons but not exceeding 10 persons.
BUFFER ZONE - A yard covered with vegetation and intended to provide an area of separation between different districts or uses.
BUILDING - A. Any structure having a roof supported by columns or walls and intended for the shelter, housing or enclosure of persons, animals or chattels, and, including covered porches or bay windows and chimneys.
B. A combination of materials to form a structure having walls and a roof. Included shall be all mobile homes and trailers to be used for human habitation
BUILDING, HEIGHT OF - The vertical distance measured from the lowest door threshold to the highest point of the roof.
BUSINESS SERVICE - The act of conducting business focused on providing a service to others such as banks, credit unions, loan companies, and other financial institutions, real estate and insurance agencies, utility offices, government, business and professional offices.
CAMPING GROUND - A parcel of land used by campers for seasonal, recreational or other temporary living purposes, in buildings of a movable, temporary or seasonal nature.

CAMPING TRAILER - A portable dwelling not designed for use as a permanent dwelling but as temporary living quarters for recreational, camping, travel, or seasonal use.
CARPORT - A covered space, open on at least two sides, for the storage of one or more vehicles.
CENTRALIZED WATER SYSTEM - Public water or a single well servicing two or more units.
COMMERCIAL RECREATION - Commercial establishment engaged in providing indoor and/or outdoor amusement. The activities may include, but are not limited to, sports clubs, amusement centers, batting cages, miniature golf, go-kart tracks, physical fitness centers, skateboard centers and racquetball facilities.
COMMON OPEN SPACE - A parcel or parcels of land or an area of water, or a combination of land and water, within a development site and designed and intended for the use or enjoyment of residents of a development, not including streets, off-street parking areas, and areas set aside for public facilities.
CONSERVATION EASEMENT – An area of land or water designated as being protected from development in perpetuity.
CONSERVATION EASEMENT AGREEMENT - A legally drafted and recorded agreement between a landowner and the Township, in which the owner agrees to place certain restrictions over all or portions of his/her land in perpetuity to retain it in a predominantly natural, scenic, agricultural or other open space condition. Except for the specific restrictions contained in the easement document, the owner retains all other rights in the property. The easement stays with the land and is therefore legally binding on present and future owners.
CONSERVATION PRACTICES - The preservation of primary conservation areas and buildings or lands of historical significance.
CONSTRUCTION - The construction, reconstruction, renovation, repair, extension, expansion, alteration or relocation of a building or structure, including the placement of mobile homes.
CONSUMER FIREWORKS - Includes combustible or explosive composition or any substances intended to produce visible and/or audible effects by combustion and which is suitable for use by the public that complies with the construction, performance, composition and labeling requirements promulgated by the Consumer Products Safety Commission in 16 CFR (relating to commercial practices) or any successor regulation and which complies with the provisions for "consumer fireworks" as defined in the American Pyrotechnics Association (APA) Standard (87-1), or any successor standard. The term does not include such devices as "ground and handheld sparkling devices," "novelties" and "toy caps" in APA Standard 87-1, the sale, possession and use of which shall be permitted at all times throughout this Township.
CUSTOMARY HOME OCCUPATION - Commonly permitted or accepted business operating from a residential property as a secondary use that does not negatively impact the surrounding area. The exterior appearance of the structure or premises is constructed and maintained as a residential structure.
DECISION - Final adjudication of a board or other body granted jurisdiction under any land use ordinance or this chapter to do so, either by reason of the grant of exclusive jurisdiction or by reason of appeals from determinations. All decisions shall be appealable to the Court of Common Pleas of the county and judicial district wherein the Township lies.
DETERMINATION - Final action by an officer, body or agency charged with the administration of any land use ordinance or applications there under, except the following:
A. The Board of Supervisors.
B. The Zoning Hearing Board.

C. The Planning Commission, only if and to the extent the Planning Commission is charged with the final decision on preliminary or final plans under the subdivision and land development or planned residential development ordinances. Determinations shall be appealable only to the boards designated as having jurisdiction for such appeal.
DEVELOPER - Any landowner, agent of such landowner or tenant with permission of such landowner, who makes or causes to be made a subdivision of land or land development.
DEVELOPMENT - 1. The disturbance of 5,000 sq. ft. or more of land resulting in any man-made change to improved or unimproved real estate, including but not limited to buildings or other structures, the placement of mobile homes, streets and other paving, utilities, filling, grading, excavation, mining, dredging or drilling operation, changes in the contour of the land and removal or destruction of topsoil, trees or other vegetative cover of the land.
2. (definition only applies to the Flood Hazard regulations in Article XVII) – any man-made change to improved or unimproved real estate, including but not limited to the construction, reconstruction, renovation, repair, expansion, or alteration of buildings or other structures; the placement of manufactured homes; streets, and other paving; utilities; filling, grading and excavation; mining; dredging; drilling operations; storage of equipment or materials; and the subdivision of land.
DEVELOPMENT PLAN - The provisions for development, including a planned residential development, a plat of subdivision, all covenants relating to use, location and bulk of buildings and other structures, intensity of use and density of development, streets, ways and parking facilities, common open space and public facilities. The phrase "provisions of development plan" when used in this chapter shall mean the written and graphic materials referred to in this definition.
DISMANTLED AND NON-OPERABLE VEHICLE - A vehicle which does not display the current Pennsylvania State Inspection Certification or is manifestly incapable of being locomotive in its existing condition.
DISPLAY FIREWORKS - Large fireworks designed primarily to produce visible or audible effects by combustion, deflagration, or detonation. This term includes, but is not limited to, salutes containing more than two grains (130 milligrams) of explosive materials, aerial shells containing more than 40 grams of pyrotechnic compositions, and other display pieces which exceed the limits of explosive materials for classification as "consumer fireworks." Display fireworks are classified as fireworks UN0333, UN0334 or UN0335 by the U.S. Department of Transportation at 49 CFR 172.101. This term also includes fused set pieces containing components which together exceed 50 milligrams of salute powder.
DRIVEWAY - A surface, other than a street, which provides vehicular access from a street to a lot.
DWELLING - A building or structure designed for living quarters for one or more families, including homes which are supported either by a foundation or by blocks or jacks or are otherwise permanently attached to the land, but not including hotels, rooming houses or other accommodations used for transient occupancy.
DWELLING UNITS - One or more rooms used for living and sleeping purposes and having a kitchen with fixed cooking facilities arranged for occupancy by one family or a single person.
DWELLING, MULTIFAMILY - A building used by more than one family living independently of each other and doing their own cooking, including apartment houses, or condominiums.

DWELLING, SINGLE-FAMILY, ATTACHED (TOWNHOUSE) - A dwelling used by one family having two party walls in common with other buildings (such as row house or townhouses) except for end units.
DWELLING, SINGLE-FAMILY, DETACHED (HOUSE) - A dwelling used by one family, having only one dwelling unit and having two side yards.
DWELLING, SINGLE-FAMILY, SEMIDETACHED (DOUBLE Duplex) - A dwelling used by one family, having one side yard and one party wall in common with another dwelling unit
EASEMENT, UTILITY - A right-of-way granted for limited use of land for public or quasi-public purpose.
ESSENTIAL SERVICES - The erection, construction, alteration or maintenance, by public utilities or municipal or other governmental agencies or private corporations under contract to a municipality, of gas, electrical, telephone, steam or water transmission or distribution systems, and sewer and solid waste disposal systems, including buildings, enclosures, wells, pumping stations, poles, mains, drains, sewers, pipes, conduits, cables, fire alarm boxes, police call boxes, traffic light signals, hydrants, sanitary landfills, incinerator waste disposal areas, and other similar equipment and accessories and services in connection therewith, reasonably necessary for the furnishing of adequate service by such public utilities or municipal or other governmental agencies or private corporations under contract to a municipality, including firehouses of fire companies and emergency services under agreement with the municipality or for the public health or safety or general welfare.
EXISTING MANUFACTURED HOME OR PARK OR SUBDIVISION - A manufactured home park or subdivision for which the construction of facilities for servicing the lots on which the manufactured homes are to be affixed (including, at a minimum, the installation of utilities, the construction of streets, and either final site grading or the pouring of concrete pads) is completed before the effective date of the floodplain management regulations adopted by a community.
EXPANSION TO AN EXISTING MANUFACTURED HOME PARK OR SUBDIVISION - The preparation of additional sites by the construction of facilities for servicing the lots on which the manufactured homes are to be affixed (including the installation of utilities, the construction of streets, and either final site grading or the pouring of concrete pads).
FAMILY - One or more persons who live in one dwelling unit and maintain a common household. A "family" may consist of a single person or of two or more persons, whether or not related by blood, marriage or adoption. It may also include domestic servants and gratuitous guests, but not occupants of a club, fraternal lodging or boarding houses.
FEMA - The Federal Emergency Management Agency, successor to the United States Department of Housing and Urban Development, Federal Insurance Administration.
FIREWORKS - Includes either consumer or display fireworks.
FLOOD - A general, but temporary condition of partial or complete inundation of normally dry land areas from the overflow of streams, rivers or other waters of the Commonwealth of Pennsylvania.
FLOOD HAZARD AREA - The one-hundred-year floodplain and that maximum area of land that is likely to be flooded by a one-hundred-year flood, as shown on the floodplain maps provided by FEMA.
FLOOD INSURANCE RATE MAP - The official map on which the Federal Emergency Management Agency has delineated both the areas of special flood hazards and the risk premium zones applicable to the community.

FLOOD INSURANCE STUDY - The official report provided by the Federal Emergency Management Agency that includes flood profiles, the Flood Insurance Rate Map, the Flood Boundary and Floodway Map, and the water surface elevation of the base flood.
FLOODPLAIN AREA - A relatively flat or low land area which is subject to partial or complete inundation from an adjoining or nearby stream, river or watercourse; and/or any area subject to the unusual and rapid accumulation of surface waters from any source.
FLOODPLAIN MANAGEMENT - The operation of a program or activities which may consist of both corrective and preventative measures for reducing flood damage, including but not limited to such things as emergency preparedness for floods, flood control works and floodplain management regulations.
FLOODPLAIN MANAGEMENT REGULATIONS - This chapter, subdivision and land development regulations, building codes, health regulations, special purpose ordinances, and other applications of the police power. The term describes such state or local regulations in any combination thereof, which provide standards for the purpose of flood damage prevention and reduction.
FLOOD PROOFING - Any combination of structural and nonstructural additions, changes or adjustments to structures which reduce or eliminate flood damage to real estate or improved real property, water and sanitary facilities, structures and their contents.
FLOODWAY - The channel of a river or other watercourse and the adjacent land areas that must be reserved in order to discharge the base flood without cumulatively increasing the water surface elevation more than one foot.
FREEBOARD - A margin of safety, expressed in feet above the one-hundred-year-flood elevation.
GOVERNING BODY - The Board of Supervisors of Antrim Township, Franklin County, Pennsylvania.
GREEN DESIGNS - Preserving primary conservation areas and incorporating green space through landscaping and courtyards to generate an aesthetic and environmentally conscious atmosphere.
GREEN SPACE - An area growing plants of any type, which include but are not limited to grass, trees, flowers, etc.
GROSS RESIDENTIAL DENSITY - The number of dwelling units per acre computed by dividing the total site area, excluding public rights-of-way, into the total number of proposed dwelling units.
GROUND FLOOR - The floor of a building nearest the mean grade of the front of the building.
HEALTH CLUBS, SPAS AND SIMILAR ESTABLISHMENTS - Any place, located either indoors or outdoors, engaged in any activities, the predominant purpose of which is exercise, fitness, health maintenance, improvement or rehabilitation, health or nutrition education or weight control.
HEAVY MANUFACTURING - The use of raw materials to fabricate an end product.
HISTORICAL PROPERTY - A building, structure, object, district, place site or area significant in the history, architecture, maritime heritage or archaeology of the Township of Antrim, the Commonwealth of Pennsylvania or the United States of America.
HISTORICALLY SIGNIFICANT SITE OR STRUCTURE - A. Any site or structure in the National Register of Historic Places (a listing maintained by the Department of the Interior) or preliminarily determined by the Department of the Interior as meeting the requirements for individual listing on the National Register;

B. Certified or preliminary determination by the Secretary of the Interior as contributing to the historical significance of a registered historic district or a district preliminarily determined by the Secretary to qualify as a registered historic district;
C. Individually listed on a state inventory of historic places in states with historic preservation programs which have been approved by the Secretary of the Interior; or
D. Any other historic site or structure that is eligible for inclusion in a federal, state or local registry of historic sites or structures.
E. Any historic site or structure that the Township deems necessary for preservation.
IMPERVIOUS AREA - A surface that prevents the percolation into the ground (examples include but are not limited to stone/gravel materials, pavement, concrete, buildings, etc.)
LAND DEVELOPMENT - Any of the following activities:

A. The improvement of one lot or two or more contiguous lots, tracts or parcels of land for any purpose involving:
1. A group of two or more residential or nonresidential buildings, whether proposed initially or cumulatively, or a single nonresidential building on a lot or lots regardless of the number of occupants or tenure.
2. The division or allocation of land or space, whether initially or cumulatively, between or among two or more existing or prospective occupants by means of or for the purpose of streets, common areas, leaseholds, condominiums, building groups or other features.
B. A subdivision of land.
C. Development in accordance with this chapter and the Pennsylvania Municipalities Planning Code, Act of 1968 and as reenacted and amended.
D. Paving for commercial or industrial use.
E. Paving of more than 12,000 square feet for residential use. Paving over concrete or bituminous surfaces which are already existing shall be excluded from Subsections C and D above and this Subsection E.
F. Any alteration of the existing topography on a single nonresidential lot, tract or parcel of land that alters the drainage characteristics of an adjoining land parcel(s) or publicly held right-of-way by increasing the rate of surface water runoff by more than 10%.
G. Any nonresidential development of land.
H. Interior changes that create any additional improvements as required by the Code, including but not limited to: additional parking, increased sewer/water flows, etc.
I. Land development does not include development which involves:
    1. The conversion of an existing single-family detached dwelling or single-family semidetached dwelling into not more than three residential units, unless such units are intended to be a condominium.
    2. The addition of an accessory building, including farm buildings, on a lot or lots subordinate to an existing principal building.
    3. The addition or conversion of buildings or rides within the confines of an enterprise which would be considered an amusement park. For the purposes of this subsection, an amusement park is defined as a tract or area used principally as a location for permanent amusement structures or rides. This exclusion shall not apply to newly acquired acreage by an amusement park until initial plans for the expanded area have been approved by the proper authorities.

LANDFILL - Includes municipal waste and residual waste landfills.

LANDOWNER - The legal or beneficial owner or owners of land, including the holder of an option or contract to purchase (whether or not such option or contract is subject to any conditions), or a lessee if he or she is authorized under the lease to exercise the rights of the landowner or other person having a proprietary interest in land.
LIGHT MANUFACTURING - Use of prepared materials to create a product through processing, fabricating, assembling or disassembling.
LINE OF SIGHT - A visually unobstructed distance of four hundred twenty five (425) feet from a point measured 10' back from the edge of the intersecting cartway at an elevation of three and one half (3 1/2) feet above the road surface to a point in the center of the cartway of oncoming traffic at an elevation of three and one half (3 1/2) feet above the cartway surface.
LOT - A designated parcel, tract or area of land established by a plat or otherwise as permitted by law and to be used, developed or built upon as a unit.
LOT AREA - The area contained within the property lines of a lot as shown on a subdivision plan, excluding space within any public right-of-way.
LOT LINES - The lines bounding a lot as defined herein.
LOT OF RECORD - A lot which has been recorded in the office of the Recorder of Deeds of Franklin County, Pennsylvania.
LOT, CORNER - A lot at the junction of and abutting two or more intersecting streets or private roads.
LOT, DEPTH OF - The average horizontal distance between the front and rear lot lines.
LOT, INTERIOR - A lot other than a corner lot.
LOT, MINIMUM WIDTH - The minimum lot distance measured from one side property line to the opposite side property line along the required front building setback line.
LOT, PANHANDLE - A polygonal shaped lot with the appearance of a "frying pan" or "flag and staff" in which the "handle" is most often used as the frontage on a public street. The "handle" shall be not less than 25 feet in width and the lot shall meet the other requirements as set forth in § 150-8(D) of this chapter, and other requirements as set forth in the ordinances of the Township.
LOWEST FLOOR - The lowest floor of the lowest fully enclosed area (including basement). An unfinished, flood resistant partially enclosed area, used solely for parking of vehicles, building access, and incidental storage, in an area other than a basement area is not considered the lowest floor of a building, provided that such space is not designed and built so that the structure is in violation of the applicable non-elevation design requirements of this ordinance.
MANUFACTURED HOME - A structure, transportable in one or more sections, which is built on a permanent chassis, and is designed for use with or without a permanent foundation when attached to the required utilities. The term does not include park trailers, travel trailers, recreational or other similar vehicles.
MANUFACTURED HOME PARK OR SUBDIVISION - A parcel (or contiguous parcels) of land divided into two or more manufactured home lots for rent or sale.
MINIWAREHOUSING/SELF-STORAGE - Principal or accessory storage space for rent or lease. Activities other than rental of storage units and pickup and deposit of storage may be allowed on the mini warehouse or storage facility premises after approval of a Zoning Permit.
MINOR REPAIR - The replacement of existing work with equivalent materials for the purpose of its routine maintenance and upkeep, but not including the cutting away of any wall, partition or portion thereof, the removal or cutting of any structural beam or bearing support, or the removal or change of any required means of egress, or rearrangement of parts of a structure affecting the exit way requirements; nor shall minor repairs include addition to, alteration of,

replacement or relocation of any standpipe, water supply, sewer, drainage, drain leader, gas, soil, waste, vent or similar piping, electrical wiring or mechanical or other work affecting public health or general safety.

MOBILE HOME - A transportable, single-family dwelling intended for permanent occupancy, contained in one unit or in two or more units designed to be joined into one integral unit capable of again being separated for repeated towing, which arrives at a site complete and ready for occupancy except for minor and incidental unpacking and assembly operations, and constructed so that it may be used without a permanent foundation. The term does not include park trailers, travel trailers, recreational or other similar vehicles.

MOBILE HOME LOT - A parcel of land in a mobile home park, improved with the necessary utility connections and other appurtenances necessary for the erection thereon of a single mobile home

MOBILE HOME PARK - A parcel or contiguous parcels of land which has been so designated and improved that it contains two or more mobile home lots for the placement thereon of mobile homes.

MULTIPLE-USE BUILDING - A single building occupied or intended to be occupied by more than one permitted principal use.

MUNICIPAL AUTHORITY - A body politic and corporate created pursuant to the Act of May 2, 1945 (P.L. 382, No. 164), known as the "Municipalities Authority Act of 1945."

MUNICIPALITY - The Township of Antrim, Franklin County, Pennsylvania.

NEW CONSTRUCTION - Structures for which the start of construction commenced on or after April 24, 1981 and includes any subsequent improvements thereto.

NEW MANUFACTURED HOME PARK OR MANUFACTURED HOME SUBDIVISION - A parcel (or contiguous parcels) of land divided into two or more mobile home lots for rent or sale for which the construction of facilities for servicing the lot on which the mobile home is to be affixed (including at a minimum, the installation of utilities, either final site grading, or the pouring of concrete pads, and the construction of streets) is complete on or after the effective date of the floodplain management regulations adopted by the Township Board of Supervisors.

NO IMPACT HOME BASED BUSINESS - A business or commercial activity administered or conducted as an accessory use which is clearly secondary to the use as a residential dwelling and which involves no customer, client or patient traffic, whether vehicular or pedestrian , pick up, delivery or removal functions to or from the premises, in excess of those normally associated with residential use. The business or commercial activity must satisfy the following requirements:

1. The business activity shall be compatible with the residential use of the property and surrounding residential uses.
2. The business shall employ no employees other than family members residing in the dwelling.
3. There shall be no display or sale of retail goods and no stockpiling or inventory of a substantial nature.
4. There shall be no outside appearance of a business use, including, but not limited to, parking, signs or lights.
5. The business activity may not use any equipment or process which creates noise, vibration, glare, fumes, odors or electrical or electronic interference, including interference with radio or television reception which is detectable in the neighborhood.
6. The business activity may not generate any solid waste or sewage discharge, in volume or type, which is not normally associated with residential use into the neighborhood.

7. The business activity shall be conducted only within the dwelling and may not occupy more than 25% of the habitable floor area.
8. The business may not involve any illegal activity.

NONCONFORMING LOT - A lot the area or dimension of which was lawful prior to the adoption or amendment of this chapter, but which fails to conform to the requirements of the zoning district in which it is located by reason of such adoption or amendment

NONCONFORMING STRUCTURE – 1. A structure or part of a structure manifestly not designed to comply with the use or extent of use provisions of the chapter or amendment heretofore or hereafter enacted, where such structure lawfully existed prior to the enactment of this chapter or amendment or prior to the application of this chapter or amendment to its location by reason of annexation. Such nonconforming structures include, but are not limited to, nonconforming signs. 2. A structure or part of a structure that does not comply with the minimum area regulations set forth in the chapter or amendment heretofore or hereafter enacted, where such structure lawfully existed prior to the enactment of this chapter or amendment or prior to the application of this chapter or amendment.

NONCONFORMING USE - A use, whether of land or of structure, which does not comply with the applicable use provisions in this chapter or amendment heretofore or hereafter enacted, where such use was lawfully in existence prior to the enactment of this chapter or amendment, or prior to the application of this chapter or amendment to its location by reason of annexation

NUDITY - Nudity means the showing of the human male or female genitals, pubic area, buttocks or anus, any part of the nipple or any part of a female breast below a point immediately above the top of the areola with less than a fully opaque covering.

OBSTRUCTION - Any structure or assembly of materials, including fill above or below the surface of the land or water, and any activity which might impede, retard or change flood flows. The planting, cultivation and harvesting of field and orchard crops or the grazing of livestock, including the maintenance of necessary appurtenant, agricultural fencing, shall not be considered an "obstruction" under this definition and shall not be subject to regulation under this section.

ONE-HUNDRED-YEAR FLOOD - The highest level of flooding that, on the average, is likely to occur every 100 years, that is that has a 1% chance of occurring each year.

ONE-HUNDRED-YEAR FLOODPLAIN - The one-hundred-year floodway and that maximum area of land that is likely to be flooded by a one-hundred-year flood as shown on the floodplain maps provided by FEMA to the Township

OPEN SPACE - The unoccupied space open to the sky on the same lot with the building, not including parking lots. Parking lots shall not be permitted in required open space.

PARKING SPACE - The space within a building, or on a lot or parking lot, for the parking or storage of one automobile.

PERSON - As used herein, refers to any natural person, any partnership, any corporation and/or association.

PLANNED RESIDENTIAL DEVELOPMENT - An area of land, controlled by a landowner, to be developed as a single entity for a number of dwelling units, or combination of residential and nonresidential uses, the development plan for which does not correspond in lot size, bulk, type of dwelling or use, density or intensity, lot coverage and required open space to the regulations established in any one district created, from time to time, under the provisions of this chapter.

PLANNING COMMISSION - The Planning Commission of Antrim Township.

POLLUTION - The contamination of any air, soil or water of the Township such as will create or is likely to create a nuisance or to render such air, soil, or water harmful, detrimental or

injurious to public health, safety or welfare or to domestic, municipal, industrial, agricultural, recreational or other legitimate beneficial uses or to livestock, wild animals, birds, fish or to other aquatic life, including but not limited to such contamination by alteration of the physical, chemical or biological properties of such air, soil or water or change in temperature, taste, color or odor thereof or the discharge of any noxious liquid, gas, radioactive material, solid or other substances into such air, soil or water.

PRIMARY CONSERVATION AREA - Land defined as "floodplain," "wetland" and/or having a slope greater than 25%.

PRIME AGRICULTURAL SOILS - Soils classified as "prime agricultural soils" in Plat Number 8 of the Comprehensive Plan for Antrim and Greencastle, dated April 14, 1992, and approved June 1 and June 9, 1992.

PROFESSIONAL OFFICE - A room or rooms used for the carrying on of a profession recognized by the Commonwealth of Pennsylvania which generally operates on an appointment basis and generates low traffic. Professional office includes the office of a physician, attorney, dentist, accountant or engineers and the like.

PUBLIC - Owned, operated or controlled by a government agency (federal, state or local).

PUBLIC GROUNDS - Includes:

A. Parks, playgrounds, trails, paths and other recreational areas and other public areas.

B. Sites for schools, sewage treatment, refuse disposal and other publicly owned or operated facilities.

C. Publicly owned or operated scenic and historic sites.

PUBLIC HEARING - A formal meeting held pursuant to public notice by the Board of Supervisors or Planning Commission, intended to inform and obtain public comment, prior to taking action in accordance with this chapter.

PUBLIC MEETING - A forum held pursuant to notice under the Act of July 3, 1986, (P.L. 388, No. 84), known as the "Sunshine Act," 65 P.S. § 271 et seq.

PUBLIC NOTICE - Notice published once a week for two consecutive weeks in a newspaper of general circulation in the Township. Such notice shall state the time and place of the hearing and the particular nature of the matter to be considered at the hearing. The first publication shall not be more than 30 days and the second publication shall not be less than seven days from the date of the hearing.

PUBLIC PARK – A recreational facility open to the public at no charge or a recreational facility or area owned by a public entity such as a municipality or state

RECREATIONAL FACILITIES - A business engaged in providing a place with activities for the purpose of enjoyment, pastime, retreat, athletics, or restorative commune with nature.

RECREATIONAL VEHICLE - A vehicle which is

a. built on a single chassis;

c. designed to be self-propelled or permanently towable by a light-duty truck,

d. not designed for use as a permanent dwelling but as temporary living quarters for recreational, camping, travel, or seasonal use.

REGULATORY FLOOD ELEVATION - The one-hundred-year-flood elevation plus a freeboard safety factor of one and one-half (1 1/2) feet.

REPAIR SERVICE - The business of fixing items such as clocks, appliances, computers and the like.

RESOURCE RECOVERY FACILITY - Provides for the extraction and utilization of materials or energy from municipal wastes that are generated off-site, including but not limited to a facility

that mechanically extracts materials from municipal wastes, a combustion facility that converts the organic fraction of municipal wastes to usable energy and any chemical or biological process that converts municipal wastes into a fuel product. The term also includes any facility for the combustion of municipal wastes that are generated off-site, whether or not the facility is operated to recover energy. The term does not include:

1. Any composting facility.
2. Methane gas extraction from a municipal waste landfill.
3. Any separation and collection center, drop-off point or collection center for recycling or any source separation or collection center for composting leaf waste.

RURAL ENTERPRISE - Businesses permitted as accessory uses on a property used primarily as an agricultural operation.

SALVAGE YARD - A lot, land or structure, or part thereof, used for the collecting, storage and sale of waste paper, rags, scrap metal or discarded material, or for the collecting, dismantling, storage and salvaging of machinery or vehicles not in running condition, and for the sale of parts thereof.

SCREENING - A well-maintained fence, wall, hedge or vegetative material at least five feet in height and of a density to conceal from the view of adjoining properties, the structures and uses of the premises on which the screening is required to be located.

SERVICE PROVIDER - The business of providing a service such as barber shops, beauty salons, photographic studios, dry cleaning, tailor and the like.

SHOPPING CENTER - A group of stores planned and designed to function as a unit for the lot on which it is located with off-street parking provided as an integral part of the unit.

SIGN - Any permanent or temporary structure or part thereof or any device attached, painted or represented, directly or indirectly, on a structure or other surface that displays or includes any letter, word, insignia, flag, or representation used as or which is in the nature of an advertisement announcement, visual communication, direction, or which is designed to attract the eye or bring the subject to the attention of the public.

SIGN, ABANDONED - A sign erected on, or related to, the use of a property which becomes vacant and unoccupied for a period six (6) months or more, or any sign which relates to a time, event, or purpose which is past.

SIGN, AREA OF - The square footage to the outer most edges of the surface which displays a message or identifies the product, activity and/or apprising the public of the location of such enterprise. When individual letters are mounted it shall be the square footage of each letter added together.

SIGN, BILLBOARD - An advertising sign, structure or symbol erected and maintained by an individual or corporation upon which space there is displayed by means of painting, posting or other method, advertising copy describing a wide variety of products or services which are not necessarily made, produced, assembled, stored or sold from the lot or premises upon which the advertisement is displayed. Any freestanding sign over fifty (50) square feet shall be considered a billboard and shall comply with the Billboard regulations.

SIGN, CANOPY OR AWNING - Any sign that is part of or attached to an awning, canopy, or other fabric, plastic, or structural protective cover over a door, entrance, window, or outdoor service area.

SIGN, DOUBLE FACED - A sign which displays a message, information or advertising on both faces of the sign.

SIGN, FREESTANDING - A sign supported by structures or supports that are placed on, or anchored in, the ground and that are independent from any building or other structure.
SIGN, GROUND - A sign, other than a freestanding sign, placed directly on ground without supports or pylons, independent from any building.
SIGN, ILLUMINATED - A sign which has characters, letters, figures, designs, or outlines illuminated by direct or indirect electric lighting or luminous device as part of the sign.
SIGN, POLITICAL - Any temporary sign pertaining to political views, an individual seeking election or appointment to a public office, or a forthcoming public election or referendum.
SIGN, PROJECTING - A sign affixed to a wall or other vertical building surface in such a manner that its leading edge extends more than six (6) inches beyond the surface of such wall or building.
SIGN, REAL ESTATE - A sign pertaining to the sale, lease, or rental of the property on which it is located.
SIGN, TEMPORARY - A sign intended for short-term use, such as a promotional sign, including signs pertaining to business events, political issues, an individual seeking public office, or a forthcoming public election.
SIGN, WALL - A sign parallel to a wall or other vertical building surface. Wall signs shall not extend beyond the edge of any wall or other surface to which they are mounted or painted and shall project no more than six (6) inches from its surface, otherwise they shall be defined as a projecting sign.
SIGN, WINDOW - A temporary or permanent sign which is oriented to the public right of way and is located on the inside or outside of a window.
SPECIAL FLOOD HAZARD AREA (SFHA) - Means an area in the floodplain subject to a 1 percent or greater chance of flooding in any given year. It is shown on the FIRM as Zone A, AO, A1 A30, AE, A99, or, AH.
START OF CONSTRUCTION - Includes substantial improvement and other proposed new development and means the date the Permit was issued, provided the actual start of construction, repair, reconstruction, rehabilitation, addition, placement, or other improvement was within 180 days from the date of the permit. The actual start means either the first placement of permanent construction of a structure on a site, such as the pouring of slab or footings, the installation of piles, the construction of columns, or any work beyond the stage of excavation; or the placement of a manufacture home on a foundation. Permanent construction does not include land preparation, such as clearing, grading, and filling; nor does it include the installation of streets and/or walkways; nor does it include excavation for a basement, footings, piers, or foundations or the erection of temporary forms; nor does it include the installation on the property of accessory buildings, such as garages or sheds not occupied as dwelling units or not part of the main structure. For a substantial improvement, the actual start of construction means the first, alteration of any wall, ceiling, floor, or other structural part of a building, whether or not that alteration affects the external dimensions of the building.
STORY - That portion of any building included between the surface of any floor and the surface of the next floor above it, or if there be no floor above it, then the space between such floor and the ceiling next above it.
STORY, HALF - A story under a gable, hip or gambrel roof, the wall plates of which at least two opposite exterior walls are not over two feet above the finished floor of such story.

STREET – A street, avenue, boulevard, road, highway, freeway, parkway, lane alley viaduct and any other ways used or intended to be used by vehicular traffic or pedestrians whether public or private.
STRUCTURE - 1. Any man-made object having an ascertainable stationary location on or in land or water, whether or not affixed to the land.
2. (definition only applies to the Flood Hazard regulations in Article X) – a walled and roofed building, including a gas or liquid storage tank that is principally above ground, as well as a manufactured home.
SUBSTANTIAL ADDITIONS TO MOBILE HOME PARKS - Any repair, reconstruction or improvement of an existing mobile home park or mobile home subdivision, where such repair, reconstruction or improvement of the streets, utilities and pads will equal or exceed 50% of the value of the streets, utilities and pads before the repair, reconstruction or improvement is started.
SUBSTANTIAL DAMAGE - Damage from any cause sustained by a structure whereby the cost of restoring the structure to its before-damaged condition would equal or exceed fifty (50) percent or more of the market value of the structure before the damage occurred.
SUBSTANTIAL IMPROVEMENTS - Any repair, reconstruction or improvement of a structure, the cost of which equals or exceeds 50% of the market value of the structure either before the improvement or repair is started, or, if the structure has been damaged and is being restored, before the damage occurred. For the purposes of this definition, substantial improvement is considered to occur when the first alteration of any wall, ceiling, floor or other structural part of the building commences, whether or not that alteration affects the external dimensions of the structure. The term does not, however, include either any project for improvement of a structure to comply with existing state or local health, sanitary or safety code specifications which are solely necessary to assure safe living conditions, or any alteration to a structure listed on the National Register of Historic Places or the State Inventory of Historic Places.
SUPPORTIVE LOW IMPACT COMMERCIAL USES - Commercial uses integrated into a residential area that serve the needs of the immediate neighborhood while not significantly impacting the residential character of the neighborhood where located nor drawing significant traffic or growth from outside the immediate neighborhood.
TOWNSHIP - The Township of Antrim, Franklin County, Pennsylvania
USE - The specific purpose for which land or a building is designed, arranged, intended or for which it is or may be occupied or maintained. The term "permitted use" or its equivalent shall not be deemed to include any nonconforming use.
VARIANCE - Relief granted pursuant to the provisions of this chapter and Articles VI and IX of the Pennsylvania Municipalities Planning Code, 53 P.S. § 10601 et seq. and § 10901 et seq.
VIOLATION - This definition is for the purpose of the Flood Plain Regulations only. The failure of a structure or other development to be fully compliant with the community's flood plain management regulations. A structure or other development without the elevation certificate, other certifications, or other evidence of compliance required in 44 CFR §60.3(b)(5), (c)(4), (c)(10), (d)(3), (e)(2), (e)(4), or (e)(5) is presumed to be in violation until such time as that documentation is provided.
WETLANDS - An area of land and/or water meeting one or more of the definitions of wetland under federal and/or Pennsylvania law and/or regulations.
YARD - An unoccupied space, other than a court, open to the sky, on the same lot with a building or structure.

YARD, FRONT - The yard on which the house fronts on the public or private road right-of-way and shall coincide with the address. There shall only be one front yard per parcel.
YARD, REAR - The opposite of the front yard, and every lot shall have a rear yard. There shall only be one rear yard per parcel.
YARD, SIDE - Any yard or yards other than the front yard or rear yard.

ARTICLE III, Establishment of Districts

§ 150-5. List of districts.
The Township is hereby divided into the classes of districts listed below:

(A) Agricultural District
(R-1) Low Density Residential District
(R-2) Medium Density Residential District
(CC) Community Commercial District
(HC) Highway Commercial District
(I) Industrial District
(FH) Flood Hazard District

§ 150-6. Zoning Map.
The boundaries of said districts are hereby established as shown on the Antrim Township Zoning Map, which accompanies and which, with all explanatory matter thereon, is hereby adopted and made a part of this chapter. An official copy of said map, indicating the latest amendments, shall be kept up-to-date for the use and benefit of the public and shall be so displayed at the Antrim Township Municipal Building.

§ 150-7. District boundaries.
In determining boundaries of districts shown on the Zoning Map, the following rules shall apply:

A. Where district boundaries are indicated as approximately following the center lines of streets, highways, watercourses or railroad rights-of-way of such lines extended, such center lines shall be construed to be such boundaries.
B. Where such boundaries are indicated as approximately following the property lines of parks or other publicly owned lands, such lines shall be construed to be such boundaries.
C. Unless otherwise shown, all district boundaries running parallel to streets shall be construed to be eight hundred (800) feet back from the rights-of-way of said streets.
D. In all cases where a Zoning district boundary divides a lot in one ownership, the Zoning District boundary shall be estimated and each district shall apply to that portion of the lot. In all cases where a district boundary line is located not farther than 15 feet away from a lot line of record, such boundary lines shall be construed to coincide with such lot lines.
E. In all cases where dimensions are not shown on the Zoning Map, the location of boundaries shown on the map shall be determined by the use of scale appearing hereon.
F. In case of uncertainty as to the true location of a district boundary line in a particular instance, the determination thereof shall be made by the Zoning Officer. An appeal may be taken to the Zoning Hearing Board, as provided in Article XIII herein.
G. The limits of a Flood Hazard District boundary shall be determined by the requirements listed in Article X of this chapter.

§ 150-8. General district regulations.

Following the effective date of this chapter and except as hereinafter provided:

A. No structure shall be erected, moved, altered, rebuilt or enlarged, nor shall any land or building be used, designed or arranged to be used for any purpose or in any manner except in conformity with all regulations, requirements and restrictions specified in this chapter for the district in which such structure or land is located.

B. No lot shall be formed from part of a lot already occupied by a structure unless such structure, all yards and open spaces connected therewith and the remaining lot comply with all requirements prescribed by this chapter for the district in which said lot is located. No land use permit shall be issued for the erection of a structure on any new lot thus created unless such structure and lot comply with all provisions of this chapter.

C. A residential lot, parcel, or tract shall only have one principal dwelling.

D. Nothing contained in this chapter shall require any change in the plans, construction or designated use of a building complying with local laws in force prior to this chapter, if the following is found to exist:
   1. A building/land use permit shall have been duly issued prior to the date of first publication of notice of public hearing on this chapter.
   2. The entire building shall have been constructed in accordance with such plans as have been filed within one year from the effective date of this chapter.

E. Lots.
   1. All lots shall have a minimum frontage on a public street or on a proposed public street of 85% of the required lot width as set forth in the minimum area regulations of this chapter. Lots fronting on private streets shall meet the required lot width as set forth in the minimum area regulations.
   2. A lot commonly referred to as a "panhandle lot" shall be deemed to satisfy the frontage requirements if said lot meets the following criteria:
      a. Frontage on a public or private street: twenty-five (25) feet minimum.
      b. A width beyond the twenty-five (25) feet frontage shall be equal to or greater than the minimum lot width requirements as set forth in the minimum area regulations of this chapter.
      c. If the proposed use of a panhandle lot is residential, only one single family detached house shall be permitted for each panhandle lot.
      d. Lot size, excluding the panhandle area, shall meet all remaining minimum area requirements as set forth in the minimum area regulations of this chapter. The panhandle area is that portion of the lot which does not meet the minimum lot width and lot depth requirements as set forth in the minimum area regulations of this chapter.
      e. There shall be no more than one panhandle lot for every five (5) acres of land.
      f. All panhandle lots shall meet the other requirements of this chapter and any other Township ordinance.

F. Private Roads. Private roads shall be permitted when appropriately planned for on a subdivision or land development plan. The plan shall be clear that the road is intended to be private and shall comply with the following:
   1. Roads shall be reviewed by the Township to ensure compliance with Article IV of Chapter 125 "Subdivision and Land Development" of the Code.

2. Road signs shall be installed and maintained prior to the issuance of the first land use permit for the development.
3. Road shall be improved to a dust free condition.
4. Signs shall be to Penn Dot standards.
5. The Road shall have a name approved by the Franklin County Planning Commission, Franklin County 911 Center, and Antrim Township.
6. Lots will be addressed off of the private road by the Township.
7. No more than three (3) dwelling units may be accessed off of a single private road.
8. Private roads shall directly access a public road.
9. A maintenance agreement shall be submitted to the Township for a legal review and incorporated into the deeds for each lot. The maintenance agreement shall include at a minimum:
    a. Clear identification of each property owner's responsibility for maintenance of the roadway.
    b. Maintenance requirements of signage.
    c. Language indemnifying the Township of all costs, liability, maintenance, and services of such road or road right of way. The Township shall not be held responsible in any manner for the private road or road right of way.

G. Uses not permitted or specifically defined in any of the established districts by this chapter shall be a conditional use. These uses shall be a conditional use only in the district that they resemble the like uses and shall be in accordance with all ordinances, rules, regulations, etc. of the Township and other applicable state or federal laws. Any questionable uses will be determined by the Board of Supervisors upon which district that the use best fits.

ARTICLE IV, Agricultural District (A)

§ 150-9. Purpose.
The Agricultural District (A) is comprised of areas of highly productive soils and where agricultural activity remains strong. The purpose of this district is to encourage continuous farming operations and allow for businesses that support or are essential for farming. Low density residential uses are allowed even though the primary use is intended to remain agricultural. Conservation practices shall be incorporated into all developments to preserve resources and the essential character of the area. All uses other than agricultural uses should expect associated by-products, including the smell of farm animals and the manure they produce, chemical sprays, slow-moving agricultural machinery on local roads, etc.

§ 150-10. Permitted uses.
A. The following uses shall be permitted in the Agricultural District:
    1. Accessory buildings in accordance with § 150-55 "Accessory Building Regulations".
    2. Accessory dwelling units in accordance with § 150-56.
    3. Agricultural and agriculturally related operations in accordance with all Federal, State, and local regulations.
    4. Bed and Breakfasts.
    5. Carpentry/woodworking shops.
    6. Cemeteries.
    7. Churches or similar places of worship.

8. Dwellings, Single family detached.
9. Forest and wildlife preserves.
10. Hunting/fishing/riding clubs.
11. Individual mobile homes.
12. Lodges and fraternal houses.
13. Public utilities.
14. Rural enterprises in accordance with §150-61.
15. Veterinary office or animal hospitals.

B. The following permitted uses shall provide a fifty (50) feet buffer zone for side and rear yards when adjacent to a residential zoning district:
   1. Farm equipment sales facilities.
   2. Federal, state, and local government offices and accessory uses etc.
   3. Lumber mills.
   4. Public Parks.
   5. Sand pits, gravel pits, peat bogs, removal of topsoil and excavation etc. in accordance with the following conditions:
      a. An individual, corporation or otherwise, engaged in or proposing to engage in the business of surface mining shall be properly licensed by the Pennsylvania Department of Environmental Protection to engage in such business.
      b. Production, processing, excavation, sedimentation ponds and stockpiling shall not be conducted closer than two-hundred (200) feet to any street or property line.
      c. All extraction operations located within five-hundred (500) feet of any residence shall be conducted between the hours of 6:00 a.m. and 7:00 p.m.
      d. Screening shall be required as defined in this chapter.
      e. Before a building permit is granted, a plan for rehabilitation, showing both existing and proposed final contours, shall be submitted and approved by the Township.
      f. Before a site reclamation plan approval is granted, the owner or his or her agent shall execute a certified check payable to the Township of a bond sufficient in the opinion of the Township to secure the rehabilitation of the site in accordance with the approved site plan.

§ 150-11. Conditional uses.

A. Conditional uses in the Agricultural District shall be as follows:
   1. Airports:
      a. Shall comply with all State and Federal regulations.
      b. There shall be no flight obstructions such as towers, chimneys or other tall structures or natural obstructions outside of the airport and located within the proposed approach zones.
      c. The glide path shall be a plane surface laid out in accordance with the operating characteristics of the aircraft for which the airport is designed. The first 500 feet of the glide path shall be wholly within the airport property.
   2. Campgrounds or recreational vehicle camps subject to the following conditions:
      a. There shall be a minimum of two (2) points of ingress and egress.
      b. All camps shall have a sewage disposal system and water supply approved by the Pennsylvania Department of Environmental Protection.

c. Common open space. All campgrounds shall provide not less than twenty percent (20%) of the total land area for usable open space purposes. Usable open space shall be so located as to be free of traffic hazards and should, where the topography permits, be centrally located and easily accessible to all campers.
d. Park density. The park density shall not exceed fifteen (15) individual lots per gross acre.
e. Setback. No trailer, tent, building, etc., shall be located closer than fifteen (15) feet to the park's exterior lot line.
f. No camp site shall be permitted to have direct access to a public street.
g. All camps and campgrounds shall comply with all applicable regulations of the commonwealth including, but not limited to, regulations covering food service, water supply, sewage disposal, bathing places, vector control, toilet facilities, sanitary stations, and garbage disposal.

3. Commercial Communication transmitting and receiving facilities and towers subject to the following conditions.
   a. Antennae and accessory equipment shall not exceed a maximum height of thirty-five (35) feet above the top of a structure upon which it is located.
   b. Antennae and accessory equipment shall be located/placed on existing structures.
   c. Antennae and accessory equipment shall not be located on any residential structure.
   d. The applicant shall be required to submit to the Township evidence of the need for the communications tower and that all alternatives have been exhausted. Applicants are required to prove the need by providing evidence that existing towers can not accommodate this added use due to structural capacity, interference, or locational needs.
   e. All facilities shall be constructed in accordance with all State and Federal regulations.
   f. Communications towers may not be located on a lot that is listed on a historic register or in an officially designated state or federal historic district.
   g. Facilities shall be removed within one (1) year from decommissioning. Upon written notice from the Township the facilities shall be removed. Failure to do so gives the Township the right to enter the property and remove such facilities at the expense of the property owner, including any and all legal costs incurred by the Township.
   h. A security fence and gate, of approved design, of not less than eight (8) feet high, including barbed wire at the top, shall completely enclose the communications tower and anchor locations of guy wire (if used). The gate shall be kept locked at all times.
   i. A minimum of one (1) parking space shall be required. Parking spaces shall be surfaced with a durable and dust free surface.
   j. Access shall be provided to the communications tower and communications equipment building by means of a public street or easement of a minimum of twenty (20) feet in width and shall be improved to a dust free surface of a minimum width of twelve (12) feet.
   k. The applicant shall submit a copy of its current Federal Communications Commission license: the name, address and emergency telephone number for the operator of the communications tower; and a certificate of insurance evidencing general liability coverage in the minimum amount of one million dollars ($1,000,000) per occurrence and property damage coverage in the amount of one million dollars ($1,000,000) per occurrence covering the communications tower and communications antennas.

l. No communications tower shall be located closer than five-hundred (500) feet from a school, any residential structure or from any, playground, ball field or other area used for active recreation.
m. Setbacks shall be no less than the total tower height from adjacent property lines and public road right-of-way lines. Such distance shall be in a straight line from the communications tower to the appropriate line.
n. All such sites shall be properly maintained with grass mowed to a maximum height of eight (8) inches and shrubbery properly tended.
o. In the event that the property is currently cultivated or in pasture, it may continue to be used for agricultural purposes.
p. Financial Security in an amount deemed satisfactory by the Board to ensure no disturbances or interferences are generated as a result of such facility.

4. Mobile Home Parks in accordance with Chapter 125.
5. Municipal waste landfills and residual waste landfills.
   a. General. Landfills must be conducted and maintained in such a manner as to ensure the health, safety and welfare of the citizens of Antrim Township.
   b. Location of landfills within the Township.
      (1) Landfills shall not be located in an area with soils classified by the Soil Conservation Service as prime agricultural soils.
      (2) A landfill shall not be located on property which has any creek, stream, run or any other free-flowing body of water within one-hundred (100) feet of the boundary lines of said landfill, nor shall any such creek, stream, run or free-flowing body of water run through any land upon which it is proposed to locate a landfill. Temporary water runoff such as that present in swales after a rainstorm shall not be considered a creek, stream, run or any other free-flowing body of water for the purpose of this section.
      (3) No part of the landfill shall be established within five-hundred (500) feet of any occupied dwelling.
      (4) No landfill shall be established within three-hundred (300) feet of any building that is currently being occupied by people for periods in excess of five (5) hours per day.
      (5) No landfill shall be established within one-hundred (100) feet of a public right-of-way. Where the right-of-way is bounded on both sides by a landfill under a single ownership, the landfill shall be set back one-hundred (100) feet on each side of the right-of-way.
      (6) No part of a landfill shall be established within one-thousand five- hundred (1,500) feet of a water supply for domestic use.
   c. Buffer zones; fencing; planting.
      (1) Buffer zone. There shall be a two hundred (200) foot buffer zone between the landfill and the adjoining properties.
      (2) Plantings. Trees and/or shrubs shall be planted to screen the landfill from view and from adjacent rights-of-way. The plantings must consist of evergreen trees and shrubs designed and planted so as to completely screen the landfill from view and create a solid screen six (6) feet in height. The planting shall be located between the right-of-way line and the fencing required by Department of Environmental Protection (DEP) rules and regulations, leaving ample area so as

not to obstruct or encroach upon the right-of-way line when plantings are sufficiently grown, and leaving sufficient area and space for vehicles to pass between adult plantings and fencing.

(3) Fencing. Fencing shall be as required by DEP rules and regulations.

d. Hours of operation and dirt and debris from trucks.

(1) The landfill shall be opened and dumping and depositing therein shall be permitted only from 7:00 a.m. to 4:30 p.m., Monday through Friday, and 7:00 a.m. to 11:00 a.m., Saturdays. However, on Saturday immediately following a week within which a national holiday occurs, the landfill shall be allowed to remain open from 7:00 a.m. to 4:30 p.m. on that Saturday. The following are national holidays: Christmas, New Year's Day, Easter, Thanksgiving, Fourth of July, Memorial Day, Martin Luther King Day, President's Day and Labor Day.

(2) In order to prevent trucks departing the landfill from depositing dirt and debris on public roads, all access roads shall be paved with macadam 1,000 feet from the point the access road intersects with the public roads, or, in the alternative, all trucks leaving the landfill shall be washed prior to departing. The truck shall be washed in such a manner to prevent debris and dirt from being deposited on public roads.

e. Conditional use landfill application approval required.

(1) No person shall start, maintain, continue to maintain or expand, whether for commercial purposes or otherwise, any landfill within Antrim Township unless such landfill has an approved conditional use landfill application from the Board of Supervisors of Antrim Township. Application for such conditional use approval shall be made to the Board of Supervisors of Antrim Township and shall be in writing, under oath, and in the form prescribed by the Board of Supervisors.

(2) Said application shall contain the following information: name of the applicant and address for the past 5 years, the location of the premises upon which the landfill is to be conducted, and the name of the owner or owners of said property, if other than the applicant.

(3) Upon any subsequent applications, the applicant must provide a statement that during the preceding term of his or her conditional use approval he or she complied with and maintained the premises in full compliance with the provisions of this section.

(4) Each application shall describe the premises upon which the landfill is to be established, specifying therein setback lines, structures erected thereon, any premises to be so used, and the book and page number identifying the deed of record as recorded by the Franklin County Recorder of Deeds.

(5) If the applicant is a partnership or association, the applicant shall furnish the information required in Subsections 8.e.(1) and (2) above for every member of the association or partnership. If the applicant is a corporation, the applicant shall furnish the information requested in Subsections 8.e.(1) and (2) above for each officer and director thereof.

(6) The application shall be signed by the applicant if an individual; by all members if the applicant is a partnership or association; and by the president, secretary and chairman of the board if the applicant is a corporation.

(7) A physical plan of the landfill drawn to scale shall be submitted with the application, including the following:
   (a) Tract metes and bounds upon which the landfill is to be maintained, the area presently in use as a landfill and the area for which a permit has been granted by the Department of Environmental Protection under the Solid Waste Management Act, as amended.
   (b) All streams, creeks, runs or other free-flowing bodies of water within 500 feet of any present landfill, all property lines within two-hundred (200) feet of the landfill, all buildings within four-hundred (400) feet of the landfill, all rights-of-way within two-hundred (200) feet of the landfill and all water supplies for domestic use within two-thousand (2,000) feet of the landfill.
   (c) Proposed planting locations designed in compliance with Subsection E(3)(b).
   (d) Soil embankments for noise, dust and visual barriers and heights of soil mounds, including proposed soil erosion and sedimentation control which has been favorably reviewed by the Soil Conservation Service.
   (e) Stormwater management provisions.
   (f) Interior road patterns identifying their relation to yard operation and points of ingress and egress onto state and Township roads.
   (g) Source of water, if plans show use of water, and location of all monitoring wells.
(8) The applicant shall also submit to the Township a site plan showing the appearance of the site following termination of any landfill activity. Such plan must show:
   (a) Final grading contours.
   (b) Planned ultimate use and ownership, if known, of the site after termination of the landfill.
(9) A separate application is required for each landfill.
(10) Applications.
   (a) The application, with the required fees, deposits, written approvals, comments and/or recommendations, as well as other documents or evidence that may be required by any federal, state or local board or agency, shall be submitted to Antrim Township at the Antrim Township Municipal Building during regular business hours, at least fifteen (15) business days prior to the next scheduled meeting of the Antrim Township Board of Supervisors at which said application is to be reviewed.
   (b) The application shall have attached to the application form, in addition to these afore referenced approvals, comments and recommendations of Antrim Township Planning Commission, Antrim Township Zoning Officer, Antrim Township Solicitor, Antrim Township Administrator and the Franklin County Planning Commission.
   (c) The comments and recommendations required in Subsections 8.e.(10)(a)and (b) above, shall be obtained at the expense of the applicant and shall be submitted as required under Subsection 8.e.(10) (a) and (b).
(11) Every prospective landfill shall pay an application fee and an application renewal fee in an amount as set forth from time to time by resolution of the Board of Supervisors. Said fees are to defray Township costs of administrating this section.

(12) Approvals shall be issued for a term of one calendar year.

(13) The landfill may be inspected and reviewed at any time during the one-year term of the initial approval of the application. A failure to comply with this section can result in said approval being revoked by Antrim Township.

(14) The Board of Supervisors of Antrim Township, upon receipt of an application timely filed, shall review said application at its next regularly scheduled meeting. After an examination of the application, the Board of Supervisors will consider the suitability of the proposed premises for the purpose, the character of the property adjacent thereto, the effect of the proposed use on the surrounding properties, the environment, as well as the health, welfare and safety of the citizens of the Township. Upon approval of the application, the Board of Supervisors of Antrim Township shall stamp the application approved. The name of the landfill owner and address of the premises approved for use as a landfill shall be designated upon said approval. Said approval shall be at all times conspicuously displayed and posted upon the premises. Said approval issued by the Board of Supervisors is not transferable or assignable.

f. Escape of municipal and residual waste. The landfill shall prevent any municipal and residual waste, including the residue of said waste, from blowing, leaking or otherwise escaping from the landfill onto any public or private property in Antrim Township. In the event of a violation of this section, in addition to any other penalties provided herein, the licensee shall remove and/or clean any such refuse within twenty-four (24) hours unless prevented from doing so in an emergency caused by adverse weather conditions. If the licensee shall be prevented from cleanup within twenty-four (24) hours by adverse weather conditions, licensee shall have twenty-four (24) hours after the weather condition is clear to correct the problem.

g. Insurance required.

(1) The landfill shall provide liability insurance in the amount of ten-million dollars ($10,000,000) for claims of liability against the Township, the Board of Supervisors, their employees, agents or representatives. However, the Board of Supervisors may require the amount of the liability insurance to be increased in order to prevent adverse effect upon public health and safety or public welfare and the environment while the landfill is active and after closure.

(2) Any cancellation of the landfill owner's insurance, either in part or in total, shall be just cause for revocation of the approval issued under this section.

h. Daily operation/responsibility. The landfill shall be responsible for the cleanup and policing of all areas and adjacent properties to which any materials are spread by natural or artificial means from said municipal waste landfill site.

i. Inspection access.

(1) The Township or its designated agent shall have the right to enter the landfill site for the purpose of monitoring compliance with this section without notice during normal operational hours and shall have the right to inspect during nonoperating hours upon twenty-four (24) hours' advance notice to the landfill.

(2) Pursuant to the Municipal Waste Planning, Recycling and Waste Reduction Act, 53 P.S. § 4000.101 et seq., certain employees of Antrim Township have been certified as municipal inspectors to ensure that municipal waste landfills are in compliance with the Solid Waste Management Act, 35 P.S. § 6018.101 et seq.

Said employees are appointed and authorized to enforce the Solid Waste Management Act and the Waste Reduction Act and regulations promulgated pursuant to said acts on behalf of Antrim Township.

j. Enforcement. This section shall be enforced by action brought before a District Justice in the same manner provided for the enforcement of summary offenses under the Pennsylvania Rules of Criminal Procedure. Any person who violates or permits the violation of this article shall, upon conviction in a summary proceeding, be punishable by a fine of not more than one-thousand ($1,000) or by imprisonment for a term not exceeding ninety (90) days. Each day or portion thereof that such violation continues, or is permitted to continue, shall constitute a separate offense. Each section of this article that is violated shall also constitute a separate offense.

k. Nuisance. In addition to the enforcement remedies as set forth in Article XV of this chapter, the Board of Supervisors of Antrim Township hereby declares any accumulation of municipal or residual waste in violation of this section to be a nuisance, and the Board of Supervisors shall give written notice to the owner or owners of land upon which said waste is deposited in violation of this section to remove or cause to be removed such waste or to abate such nuisance, and upon failure of such owner or owners to remove such waste or to abate such nuisance and a twenty-day period after such notice to remove or abate the same, the Board of Supervisors may cause said land to be entered upon and said waste removed and/or said nuisance abated and may collect the costs of such removal and/or abatement from the owner or owners of said land.

l. Applicability of other laws. If this section is in conflict with the Solid Waste Management Act, as amended, the Municipal Waste Planning, Recycling and Waste Reduction Act, or the regulations promulgated pursuant to said acts, then the section or act imposing the most stringent requirement shall apply.

m. Definitions.

(1) The definitions contained in the Solid Waste Management Act, 35 P.S. § 6018.101 et seq., the Municipal Waste Planning, Recycling and Waste Reduction Act, 53 P.S. § 4000.101 et seq., and regulations promulgated pursuant to those acts, are applicable to this section.

(2) In this section the singular shall include the plural and the masculine shall include the feminine and neuter.

6. Prisons, detention centers, jails and correctional institutions provided that such facilities are located a minimum of one-thousand (1,000) feet from any adjoining zoning district boundary, schools, daycare centers, nursing homes, hospitals, geriatric centers and residential uses.

7. Public schools, private schools, and daycare centers.

8. Recreational facilities and recreational organizations subject to the following conditions:

a. All exterior lighting shall be shielded from adjacent properties.

b. Along all property lines adjacent to a residential use, screening shall be provided as defined in this chapter.

§ 150-12 Minimum area regulations for the Agricultural (A) District.

Lot size (sq. ft.)	80,000
Lot width (feet)	150

Lot Depth (feet)	200
Front yard (feet)	25
Side Yard (feet)	12
Rear yard (feet)	25
Maximum Height	35
Maximum impervious area	50%

- New residential subdivisions and developments shall provide a setback of one-hundred (100) feet along property lines adjacent to existing farms and farmland.

ARTICLE V, Low Density Residential District (R-1)

§ 150-13 Purpose.
The Low Density Residential (R-1) district allows for low density residential development and other minimal supportive uses. The purpose is to create a rural community atmosphere in areas not supported by public utilities. Conservation practices shall be incorporated into all developments to preserve resources and the essential character of the area.

§ 150-14. Permitted uses.

A. The following uses shall be permitted in the Low Density Residential District:
   1. Accessory buildings in accordance with § 150-55 "Accessory Building Regulations".
   2. Accessory dwelling units in accordance with §150-56.
   3. Accessory uses incidental to the principal use.
   4. Agriculture.
   5. Bed and Breakfasts.
   6. Cemeteries.
   7. Churches or similar places of worship.
   8. Dwelling, Single family detached.
   9. Dwelling, Single family semidetached.
   10. Federal, state, and local government offices and accessory uses.
   11. Forest and wildlife preserve.
   12. Individual mobile homes.
   13. Lodges and fraternal houses.
   14. Public Parks.
   15. Public utilities.
   16. Rural enterprises in accordance with §150-61.

§ 150-15. Conditional uses.

A. Conditional uses in the Low Density Residential District shall be as follows:
   1. Agriculturally related operations in accordance with all Federal, State, and local regulations.
   2. Campgrounds or recreational vehicle camps subject to the following conditions.
      a. There shall be a minimum of two (2) points of ingress and egress.
      b. All camps shall have a sewage disposal system and water supply approved by the State Department of Environmental Protection.

c. Common open space. All campgrounds shall provide not less than twenty percent (20%) of the total land area for usable open space purposes. Usable open space shall be so located as to be free of traffic hazards and should, where the topography permits, be centrally located and easily accessible to all campers.
d. Park density. The park density shall not exceed fifteen (15) individual lots per gross acre.
e. Setback. No trailer, tent, building, etc., shall be located closer than fifteen (15) feet to the parks exterior lot line.
f. No camp site shall be permitted to have direct access to a public street.
g. All camps and campgrounds shall comply with all applicable regulations of the commonwealth including, but not limited to, regulations covering food service, water supply, sewage disposal, bathing places, vector control, toilet facilities, sanitary stations, and garbage disposal.

3. Communication transmitting and receiving facilities, and towers subject to the following conditions:
   a. Antennae and accessory equipment shall not exceed a maximum height of thirty-five (35) feet above the top of a structure upon which it is located.
   b. Antennae and accessory equipment shall be located/placed on existing structures.
   c. Antennae and accessory shall not be located on any residential structure.
   d. The applicant shall be required to submit to the Township evidence of the need for the communications tower and that all alternatives have been exhausted. Applicants are required to prove need by providing evidence that existing towers can not accommodate this added use due to structural capacity, interference, or locational needs.
   e. All facilities shall be constructed in accordance with all State and Federal regulations.
   f. Communications towers may not be located on a lot that is listed on a historic register or in an officially designated state or federal historic district.
   g. Facilities shall be removed within one year from decommissioning. Upon written notice from the Township the facilities shall be removed. Failure to do so gives the Township the right to enter the property and remove such facilities at the expense of the property owner, including any and all legal costs incurred by the Township.
   h. A security fence and gate, of approved design, of not less than eight feet, including barbed wire at the top, shall completely enclose the communications tower and anchor locations of guy wire (if used). The gate shall be kept locked at all times.
   i. A minimum of one parking space shall be required. Parking spaces shall be surfaced with a durable and dust free surface.
   j. Access shall be provided to the communications tower and communications equipment building by means of a public street or easement of a minimum of twenty (20) feet in width and shall be improved to a dust free surface of a minimum width of twelve (12) feet.
   k. The applicant shall submit a copy of its current Federal Communications Commission license: the name, address and emergency telephone number for the operator of the communications tower; and a certificate of insurance evidencing general liability coverage in the minimum amount of one-million dollars ($1,000,000) per occurrence and property damage coverage in the amount one-million dollars ($1,000,000) per occurrence covering the communications tower and communications antennas.

l. No communications tower shall be located closer than five-hundred (500) feet from a school, any residential structure or from any, playground, ball field or other area used for active recreation.
m. Setbacks shall be no less than the total tower height from adjacent property lines and public road right-of-way lines. Such distance shall be in a straight line from the communications tower to the appropriate line.
n. All such sites shall be properly maintained with grass mowed to a maximum height of eight (8) inches and shrubbery properly tended.
o. In the event that the property is currently cultivated or in pasture, it may continue to be used for agricultural purposes.
p. Financial Security in an amount deemed satisfactory by the Board to ensure no disturbances or interferences are generated as a result of such facility.

4. Public schools, private schools, day care centers, nursing homes, personal care establishments, hospitals, and geriatric centers.
5. Recreational facilities and recreational organizations.
   a. All exterior lighting shall be shielded from adjacent properties.
   b. Along all property lines adjacent to a residential use, screening shall be provided as defined in this chapter.

§ 150-16 Minimum area regulations for the Low Density District (R-1).

	On lot sewer	**Central sewer**
Lot size (sq. ft.)	30,000	15,000
Lot width (feet)	100	100
Lot Depth (feet)	150	150
Front yard (feet)	25	25
Side Yard (feet)	12	12
Rear yard (feet)	25	25
Maximum Height	35	35

- New residential subdivisions and developments shall provide a setback of one-hundred (100) feet along property lines adjacent to existing farms and farmland.

ARTICLE VI, Medium Density Residential District (R-2)

§ 150-17 Purpose.
The purpose of the Medium Density Residential (R-2) district is to allow for higher densities of residential uses and other supportive low impact commercial uses on smaller lot sizes that are supported by public utilities. Developments shall interconnect with other developments and neighboring properties to ensure safe ingress and egress in the event of an emergency. Conservation practices shall be incorporated into all developments to preserve resources and the essential character of the area.

§ 150-18. Permitted uses.
A. The following uses shall be permitted in the Medium Density Residential District:
   1. Accessory buildings in accordance with § 150-55 "Accessory Building Regulations".
   2. Accessory dwelling units in accordance with §150-56.

3. Agriculture.
4. Bed and breakfast.
5. Boarding, lodging or rooming houses.
6. Cemeteries.
7. Churches or similar places of worship.
8. Conversions of existing single family detached dwellings to single family semidetached dwelling.
9. Dwelling, Single family Attached (townhouses).
10. Dwelling, Single family detached.
11. Dwelling Single family semidetached.
12. Dwelling, Multifamily.
13. Federal, state, and local government offices and accessory uses etc.
14. Funeral Homes and Parlors.
15. Individual mobile homes.
16. Lodges and fraternal houses.
17. Public Parks
18. Public schools, private schools, and daycare centers.
19. Public utilities.
20. Rural enterprises in accordance with §150-61.

§ 150-19. Conditional uses.

A. Conditional uses in the Medium Density Residential District shall be as follows:
   1. Agriculturally related operations in accordance with all Federal, State, and local regulations.
   2. Recreational facilities and recreational organizations.
      a. All exterior lighting shall be shielded from adjacent properties.
      b. Along all property lines adjacent to a residential use, screening shall be provided as defined in this chapter.
   3. Residential care establishments, including but not limited to group homes and personal care establishments.
   4. Supportive low impact commercial uses
      a. Uses shall be designed to allow and encourage non-motor vehicle and pedestrian traffic access from the surrounding neighborhood.
      b. Uses shall incorporate design and architectural elements and landscaping consistent with the character of the immediate neighborhood.
      c. Uses shall comply with minimum area regulations of the Community Commercial Zoning District.

§ 150-20 Minimum Area Regulations.

	On lot sewer	**Central sewer**	**Attached dwelling residences (Townhouses) (central sewer required)**
Lot size (sq. ft.)	20,000	10,000	2,500
Lot width (feet)	100	60	20

Lot Depth (feet)	100	100	–
Front yard (feet)	25	25	25
Side Yard (feet)	12	12	12
Rear yard (feet)	25	25	25
Maximum Height	45	45	45

- New residential subdivisions and developments shall provide a setback of one-hundred (100) feet along property lines adjacent to existing farms and farmland.

ARTICLE VII, Community Commercial District (CC)

§ 150- 21 Purpose.
The Community Commercial (CC) district is comprised of medium density residential, light commercial uses, retail business, service-oriented businesses, personal service, and professional services. The purpose of this district is to create employment, promote uses oriented towards pedestrian customers, and create the interconnection of nonresidential establishments to reduce congestion on the main roads. This district promotes adaptive reuse of existing buildings. It is encouraged to mix commercial and residential uses to create a suitable economic base to support both the residential and economic market. Development shall include conservation practices through green designs and promote a healthy, safe environment where residential and commercial uses comingle. Designs are encouraged to create an aesthetic shopping and working environment.

§ 150-22. Permitted uses.
A. The following uses shall be permitted in the Community Commercial District:
   1. Accessory buildings in accordance with § 150-55 "Accessory Building Regulations".
   2. Accessory dwelling units in accordance with §150-56.
   3. Accessory uses incidental to the principle use.
   4. Agricultural and agriculturally related operations in accordance with all Federal, State, and local regulations.
   5. Bed and Breakfasts.
   6. Boarding, lodging or rooming houses.
   7. Business services.
   8. Carpentry/woodworking shops.
   9. Cemeteries.
   10. Church or similar places of worship.
   11. Dwelling, Attached (townhouses).
   12. Dwelling, Single family detached.
   13. Dwelling, Single family semidetached.
   14. Dwelling, Multifamily.
   15. Federal, state, and local government offices and accessory uses etc.
   16. Funeral Homes and Parlors.
   17. Health clubs, health spas and other or similar establishments.
   18. Hotels and Motels.
   19. Individual mobile homes.

20. Lodges and fraternal houses.
21. Mini warehousing and self storage establishments.
22. Multiple use buildings.
23. Professional offices.
24. Public Parks.
25. Public utilities.
26. Repair services.
27. Restaurants.
28. Retail businesses.
29. Rural enterprises in accordance with §150-61.
30. Service providers.
31. Theatres.
32. Veterinary office or animal hospitals.

B. The following uses shall be permitted in the Community Commercial District with greater minimum area regulations:
   1. Accessory Buildings in accordance with § 150-24(A)
   2. Automotive, trailer and recreational vehicle sales and service.
   3. Convention Center.
   4. Farm equipment sales facilities.
   5. Mobile Home Parks.
   6. Public schools, private schools, daycare centers, geriatric centers, nursing homes, personal care establishments, hospitals, boarding homes and similar institutions.
   7. Recreational facilities and recreational organizations.
   8. Shopping centers in accordance with the following provisions:
      a. Access. There shall be a minimum of two (2) separate points of ingress and egress and no access points shall be located within two-hundred (200) feet of intersecting streets, unless such points are located directly at an intersection.
      b. Management. A shopping center shall be under unified management which shall clearly establish centralized responsibility for the operation and maintenance of the project including all common areas.
      c. Signs. There shall be only one (1) freestanding sign per road frontage or access in compliance with the applicable provisions of this chapter. Such free standing sign shall be exempt from size limitations and the location and detail shall be shown on the land development plan
      d. Circulation. Traffic circulation within a shopping center project shall be designed to minimize pedestrian and vehicular mixing and congestion. Circulation shall be provided along the outer perimeters and along store entrances to serve as an internal road separate from the main roadway. This road shall be owned and maintained by the shopping center.
      e. All access to outparcels shall use the internal roadway.
      f. Maintenance agreements shall be required and shall be reviewed and approved by the Township solicitor before site approval.

§ 150-23. Conditional uses.

A. Conditional uses in the Community Commercial District shall be as follows:
   1. Wholesale business facilities.

a. The applicant for a warehousing or wholesale trade establishment shall provide a detailed written description of the proposed use in each of the following topics:
   (1) The nature of the on-site activities and operations, the types of materials stored, the frequency of distribution and restocking, the duration period of storage of materials and the methods for disposal of any surplus or damaged materials.
   (2) The general scale of the operation in terms of its market area, specific floor space requirements for each activity, the total number of employees on each shift and an overall needed site size.
   (3) Any environmental impacts that are likely to be generated (e.g., noise, smoke, dust, litter, glare, vibration, electrical disturbance, wastewater, stormwater, solid waste, etc.) and specific measures employed to mitigate or eliminate any negative impacts.
   (4) Expected traffic impacts (number of total vehicle trips per day, peak hour trips, breakdown of trips by vehicle size, trip distribution, effects on existing volumes of nearby corridors and intersections serving traffic generated by the proposed use) and any measures or improvements that will be used to assure an acceptable level of service.

b. Screening. Screening shall be provided along the entire property line adjacent to residential uses.

§ 150- 24 Minimum area regulations for the Community Commercial District (CC):

A.

	Min. Area Regulation for uses §150-22(A)	**Min. Area Regulations for uses § 150-22 (B) and § 150-23 Cond. Uses**
Lot size (sq. ft.)	10,000	40,000
Lot width (feet)	75	150
Lot Depth (feet)	100	150
Front yard (feet)	25	25
Side Yard (feet)	12	25
Rear yard (feet)	25	40
Maximum Height	45	45
Maximum impervious area	75%	75%

B. Residential uses shall meet the minimum area regulations of the R-2 Zoning District.

C. New residential subdivisions and developments shall provide a setback of one-hundred (100) feet along property lines adjacent to existing farms and farmland.

ARTICLE VIII, Highway Commercial District (HC)

§ 150-25. Purpose.

The purpose of the Highway Commercial District (HC) is to provide light manufacturing, retail shopping, service facilities, and other uses supported by highway traffic to create employment opportunities as well as attract local and regional consumers and to serve the needs of the general community. Green designs shall be used to create an aesthetic shopping and working environment.

§ 150-26. Permitted uses.

A. The following uses shall be permitted in the Highway Commercial District:
   1. Accessory buildings in accordance with § 150-55 "Accessory Building Regulations".
   2. Accessory uses incidental to the principle use.
   3. Business service.
   4. Churches or similar places of worship.
   5. Funeral Homes and Parlors.
   6. Lodges and fraternal houses.
   7. Mini warehousing and self storage establishments.
   8. Professional offices.
   9. Public Utilities.
   10. Service providers.
   11. Veterinary office or animal hospitals.

B. The following uses shall be permitted in the Highway Commercial District with greater minimum area regulations:
   1. Accessory uses incidental to the principle use in accordance with the minimum area regulations listed in 150-28.
   2. Agricultural and Agriculturally related operations in accordance with all Federal, State, and local regulations.
   3. Automotive, trailer and recreational vehicle sales and service.
   4. Carpentry/Woodworking shops.
   5. Farm equipment sales facilities.
   6. Federal, state, and local government offices and accessory uses etc.
   7. Health clubs, health spas, and other similar establishments.
   8. Hotels and Motels.
   9. Laundry, dry cleaning and/or clothes pressing plant.
   10. Light manufacturing.
   11. Multiple use buildings.
   12. Recreational facilities and recreational organizations.
   13. Repair services.
   14. Restaurants.
   15. Retail businesses.
   16. Rural enterprises in accordance with §150-61.
   17. Theatres.
   18. Wholesale business facilities.

C. The following uses shall be permitted in the Highway Commercial District with greater minimum area regulations:
   1. Accessory buildings in accordance with the minimum area regulations listed in 150-28.
   2. Accessory uses incidental to the principle use.
   3. Building material storage, lumber yards, and lumber mills.
   4. Convention Center.
   5. Food manufacturing and processing.
   6. Public schools, private schools, daycare centers, geriatric centers, nursing homes, personal care establishments, hospitals, and similar institutions.
   7. Shopping centers in accordance with the following provisions:

a. Access. There shall be a minimum of two (2) separate points of ingress and egress and no access points shall be located within two hundred (200) feet of intersecting streets, unless such points are located directly at an intersection.
b. Management. A shopping center shall be under unified management which shall clearly establish centralized responsibility for the operation and maintenance of the project including all common areas.
c. Signs. There shall be only one (1) freestanding sign per road frontage or access in compliance with the applicable provisions of this chapter. Such free standing sign shall be exempt from size limitations and the location and detail shall be shown on the land development plan
d. Circulation. Traffic circulation within a shopping center project shall be designed to minimize pedestrian and vehicular mixing and congestion. Circulation shall be provided along the outer perimeters and along store entrances to serve as an internal road separate from the main roadway. This road shall be owned and maintained by the shopping center.
e. All access to outparcels shall use the internal roadway.
f. Maintenance agreements shall be required and shall be reviewed and approved by the Township solicitor before site approval.

§ 150-27. Highway Commercial conditional uses.

A. Conditional uses in the Highway Commercial District shall be as follows.
   1. Adult businesses.
      a. Adult businesses must be conducted and maintained in such a manner as to ensure the health, safety and welfare of the citizens and their property in Antrim Township.
      b. General regulations.
         (1) No adult-oriented business shall be located within one-thousand (1,000) feet of any of the following land uses, as measured from the nearest point of both properties.
            (a) Churches.
            (b) Schools (public or private).
            (c) Child-care/day-care facility.
            (d) Residence.
            (e) Park.
            (f) Playground.
            (g) Community center.
            (h) Library.
            (i) Museum.
            (j) Camp.
            (k) Amusement park.
            (l) Ball field.
            (m) Any other area where minors congregate.
         (2) No adult-oriented business shall be located on a parcel of land that is adjacent to an interstate or Grindstone Hill Road from S.R. 0016 south to Exit 3 of Interstate 81.
         (3) No adult-oriented business shall be located within two-thousand (2,000) feet of another adult business.

(4) Permit required. No adult business shall be commenced or continued without a conditional use permit being obtained from the Township pursuant to this chapter.
(5) Signs and displays. No exterior display or interior display which is visible from outside the business shall be made to identify or portray the type of activity which occurs at an adult-oriented business, excepting for one approved ground sign not to exceed a surface area of thirty-six (36) square feet for both sides combined. Such sign shall be subject to all other limitations applicable to signs. It shall not incorporate any obscene material, sexual messages, or any sexual or obscene innuendos, or any pictures, but shall be otherwise unlimited as to message. All entrances to an adult business shall be clearly and legibly posted by a notice indicating that minors are prohibited from entering the premises.
(6) Nonconforming buildings or lots. No nonconforming building or lot shall be used for an adult-oriented business. No other existing building, lot or use shall be added to, enlarged, expanded in size or program or converted for purposes of conducting an adult-oriented business unless application to do so has been made pursuant to this section.
(7) All exterior areas of the adult business, including buildings, landscaping and parking areas, shall be kept free of trash and debris and maintained in a clean and orderly manner at all times.
(8) Hours of operation shall not be from 2:00 a.m. to 6:00 a.m. and such businesses must be closed on Sundays and all federal observed holidays.
(9) Each adult business shall conform to all applicable laws and regulations with regards to federal, state and local laws.

c. Prohibited activities. Because they are known to present severe health risks (including spread of sexually transmitted diseases), encourage prostitution, increase sexual assaults and attract criminal activity, the following activities shall not be permitted in any adult-oriented business within Antrim Township:
(1) Adult business shall not sell or display "obscene matter," as that term is defined by the PA Crimes Code or its successors, and may not exhibit "harmful matter," as that term is defined by the PA Crimes Code or its successors, to minors.
(2) No adult business shall be operated in any manner that permits the observation of any persons or material depicting, describing or related to "specified sexual activities" or "specified anatomical areas" inside the premises from any public way or from any location outside the building or area of such establishment. This provision shall apply to any display, decoration, sign, show window or other opening.
(a) Specified sexual activities:
1. Fondling or other erotic touching of human genitals pubic region, buttocks, anus (or) female breast.
2. Sex acts, normal or deviant, actual or simulated, including intercourse, oral copulation or sodomy.
3. Acts of human masturbation, actual or simulated.
4. Excretory function as part of or in connection with any of the activities set forth above.
(b) Specified anatomical areas:

1. Less than completely and opaquely covered human genitals, pubic region, buttocks or female breast below a point immediately above the top of the areola.
2. Human male genitals in a discernibly turgid state, even if completely and opaquely covered.

(c) No loudspeakers or sound equipment shall be used by an adult business for the amplification of sound to a level audible beyond the walls of the building in which the business is located.

(d) Public appearance by a person knowingly or intentionally engaged in sexual intercourse, deviate sexual conduct or the fondling of the genitals of himself or another person, or the fondling of female breasts.

(e) The knowing and intentional public appearance of a person in a state of nudity.

d. Adult businesses must meet the following minimum criteria:

(1) Minimum front yard setback of three hundred (300) feet.

(2) Minimum side and rear yard of one-hundred (100) feet.

(3) Screening shall be provided along all property lines that are not adjacent to a public road, which shall be three (3) rows of evergreens, six (6) feet in height, and staggered so as to not see through them. The screening must be maintained by the property owners, and trees that do not survive must be replaced as soon as they show signs of dying.

(4) Meet any other condition set forth by the Board of Supervisors which is reasonable and that provides for the health, safety, and well-being of the public in general.

2. Commercial Communication transmitting and receiving facilities not including towers.

a. Antennae and accessory equipment shall not exceed a maximum height of thirty-five (35) feet above the top of a structure upon which it is located.

b. Antennae and accessory equipment shall be located/placed on existing structures.

c. Antennae and accessory shall not be located on any residential structure

d. The applicant shall be required to submit to the Township evidence of the need for antennae and that all alternatives have been exhausted. Applicants are required to prove need by providing evidence that existing antennae can not accommodate this added use due to structural capacity, interference, or locational needs.

e. All facilities shall be constructed in accordance with all State and Federal regulations.

f. Facilities shall be removed within one year from decommissioning. Upon written notice from the Township the facilities shall be removed. Failure to do so gives the Township the right to enter the property and remove such facilities at the expense of the property owner, including any and all legal costs incurred by the Township.

g. The applicant shall submit a copy of its current Federal Communications Commission license: the name, address and emergency telephone number for the operator of the communications tower; and a certificate of insurance evidencing general liability coverage in the minimum amount of one-million dollars($1,000,000) per occurrence and property damage coverage in the amount one-million dollars ($1,000,000) per occurrence covering the communications tower and communications antennas.

h. Financial Security in an amount deemed satisfactory by the Board to ensure no disturbances or interferences are generated as a result of such facility.

3. Fireworks sales.

a. Fireworks sales and storage establishments must be conducted and maintained in such a manner as to ensure the health, safety and welfare of the citizens and their property in Antrim Township and any other neighboring municipality.
b. General regulations.
   (1) Fireworks sales and/or storage facilities shall supply adequate fire suppression by either a fire hydrant if on public water, or a water tower or similar water storage device to supply the sprinkler system at full flow with a minimum of one (1) hour of water.
   (2) All front, side and rear yards shall be fifty (50) feet.
   (3) No fireworks sales and/or storage facility shall be located within two-hundred-fifty (250) feet, measured from the property line, from another fireworks sales or storage facility's property line.
   (4) Nonconforming buildings or lots. No nonconforming building or lot shall be used for a fireworks-oriented business. No nonconforming buildings, lots or uses shall be added to, enlarged, expanded in size or program or converted for purposes of conducting any fireworks sales and/or storage business unless application to the Zoning Hearing Board to do so has been made pursuant to this section.
   (5) Each fireworks sales and storage business shall conform to all applicable laws and regulations with regards to federal, state and local laws. If any of these regulations conflict then the most stringent requirement shall apply.
   (6) Meet any other condition set forth by the Board of Supervisors which is reasonable and that provides for the health, safety, and well-being of the public in general.
c. It shall be prohibited to sell display fireworks within the municipal boundaries of Antrim Township.

4. Research facilities.
   a. Provide a detailed description of the type of research being conducted and any potential public health concern.
   b. Provide a list of materials, chemicals, biological agents etc. to be used or stored on site.
   c. Any modification to the type of research being conducted shall require a re-submittal of subsection a. and b. for determination by the Board of Supervisors as to the need for a public hearing.
5. Resource recovery facilities and transfer stations excluding salvage yards.
   a. General.
      (1) Resource recovery facilities and transfer stations shall be conducted and maintained in such a manner as to ensure the health, safety and welfare of the citizens of Antrim Township.
      (2) All operations shall be conducted inside a building.
      (3) Resource recovery facilities and transfer stations shall comply with all State, Federal, and local regulations.
      (4) Fencing. Fencing shall be required in accordance with DEP rules and regulations.
   b. Location of resource recovery facilities and transfer stations within the Township shall:
      (1) not be located in an area with soils classified by the Soil Conservation Service as prime agricultural soils.

(2) not be located on property which has any creek, stream, run or any other free-flowing body of water within one-hundred (100) feet of the boundary lines of said facility or station, nor shall any such creek, stream, run or free-flowing body of water run through any land upon which it is proposed to locate a resource recovery facility or transfer station. Temporary water runoff such as that present in swales after a rainstorm shall not be considered a creek, stream, run or any other free-flowing body of water for the purpose of this section.

(3) not be established within one-hundred (100) feet of a property line.

(4) not be established within one-hundred (100) feet of a public right-of-way. Where the right-of-way is bounded on both sides by a resource recovery facility or transfer station under a single ownership, the facility or station shall be set back one-hundred (100) feet on each side of the right-of-way.

(5) not be established within one-thousand-five-hundred (1,500) feet of a water supply for domestic use.

c. A physical plan drawn to scale of the resource recovery facility or transfer station shall be submitted along with the application, including the following:

(1) Tract metes and bounds upon which the facility or station is to be maintained, the area presently in use as a facility or station and the area for which a permit has been granted by the Department of Environmental Protection.

(2) All streams, creeks, runs or other free-flowing bodies of water within five-hundred (500) feet of all property lines, all properties within two-hundred (200) feet of the facility or station, all buildings within two-hundred (200) feet of the station or facility, all rights-of-way within two-hundred (200) feet of the facility or station and all water supplies for domestic use within five-hundred (500) feet of the facility or station.

(3) Proposed planting locations.

(4) Soil embankments for noise, dust and visual barriers and heights of soil mounds, including proposed soil erosion and sedimentation control which has been favorably reviewed by the Soil Conservation Service.

(5) Stormwater management provisions.

(6) Interior road patterns and points of ingress and egress onto state and Township roads.

(7) Source of water, if plans show use of water, and location of all monitoring wells.

6. Truck stops.

a. The applicant for a truck stop shall provide a detailed written description of the proposed use in each of the following topics:

(1) The nature of the on-site activities and operations, the types of materials stored, the frequency of distribution and restocking, the duration period of storage of materials and the methods for disposal of any surplus or damaged materials.

(2) The general scale of the operation in terms of its market area, specific floor space requirements for each activity, the total number of employees on each shift and an overall needed site size.

(3) Any environmental impacts that are likely to be generated (e.g., noise, smoke, dust, litter, glare, vibration, electrical disturbance, wastewater, stormwater, solid waste, etc.) and specific measures employed to mitigate or eliminate any negative impacts.

(4) Expected traffic impacts (number of total vehicle trips per day, peak hour trips, breakdown of trips by vehicle size, trip distribution, effects on existing volumes of nearby corridors and intersections serving traffic generated by the proposed use) and any measures or improvements that will be used to assure an acceptable level of service.

b. Screening. Screening shall be provided along the entire property line adjacent to residential uses.

c. Property shall not abut a residential district.

d. No parking, buildings, or drive areas shall be within three-hundred (300) feet of a residential dwelling.

e. Access to a local street, as defined by this chapter, shall not be permitted.

f. Ingress, egress and internal traffic circulation shall be designed to ensure safety and minimize congestion and accommodate pedestrian traffic.

§150-28 Minimum area regulations for Highway Commercial District (HC).

	Min. Area Regulations for § 150-26 (A)	**Min. Area Regulations for § 150-26 (B)**	**Min. Area Regulations for § 150-26 (C) and 150-27 Cond. Uses**
Lot size (sq. ft.)	10,000	20,000	40,000
Lot width (feet)	75	100	150
Lot Depth (feet)	100	100	150
Front yard (feet)	25	25	25
Side Yard (feet)	12	12	25
Rear yard (feet)	25	25	40
Maximum Height	40	50	50
Maximum impervious area	75%	75%	75%

ARTICLE IX, Industrial District (I)

§ 150-29 Purpose.

The purpose of the Industrial District (I) is to provide employment by allowing clustered industrial development in appropriate areas and to provide sites for industrial uses by minimizing the hazards and nuisances created by the operation of industry. Emphasis shall be put on creating safe traffic patterns separating employees from the industrial deliveries or shipments. Green designs shall be used to create an aesthetic environment.

§ 150-30. Permitted uses.

A. The following uses shall be permitted in the Industrial District:
   1. Accessory Buildings in accordance with § 150-55 "Accessory Building Regulations".
   2. Accessory uses incidental to the principle use.
   3. Agricultural and Agriculturally related operations in accordance with all Federal, State, and local regulations.
   4. Automotive, trailer and recreational vehicle sales and service.
   5. Building materials storage, lumberyards, and lumber mills.

6. Federal, state, and local government offices and accessory uses etc.
7. Laundry, dry cleaning and or clothes pressing plant.
8. Light manufacturing.
9. Mini warehousing and self storage establishments.
10. Multiple use buildings.
11. Public utilities.
12. Repair Services.
13. Research facilities.
14. Rural Enterprise in accordance with §150-61.
15. Wholesale business facilities.

B. The following uses shall be permitted in the Industrial District with greater minimum area regulations:
   1. Accessory Buildings in accordance with the minimum area regulations listed in 150-32.
   2. Distribution facilities.
   3. Food manufacturing and processing.
   4. Heavy Manufacturing.
   5. Resource recovery facilities and transfer stations.
   6. Truck stops.

§ 150-31 Conditional Uses.

A. Conditional uses in the Industrial District shall be as follows:
   1. Commercial Communication transmitting and receiving facilities not including towers.
      a. Antennae and accessory equipment shall not exceed a maximum height of thirty-five (35) feet above the top of a structure upon which it is located.
      b. Antennae and accessory equipment shall be located/placed on existing structures.
      c. Antennae and accessory shall not be located on any residential structure
      d. The applicant shall be required to submit to the Township evidence of the need for antennae and that all alternatives have been exhausted. Applicants are required to prove need by providing evidence that existing antennae can not accommodate this added use due to structural capacity, interference, or locational needs.
      e. All facilities shall be constructed in accordance with all State and Federal regulations.
      f. Facilities shall be removed within one (1) year from decommissioning. Upon written notice from the Township the facilities shall be removed. Failure to do so gives the Township the right to enter the property and remove such facilities at the expense of the property owner, including any and all legal costs incurred by the Township.
      g. The applicant shall submit a copy of its current Federal Communications Commission license: the name, address and emergency telephone number for the operator of the communications tower; and a certificate of insurance evidencing general liability coverage in the minimum amount of one-million dollars ($1,000,000) per occurrence and property damage coverage in the amount one-million dollars ($1,000,000) per occurrence covering the communications tower and communications antennas.
      h. Financial Security in an amount deemed satisfactory by the Board to ensure no disturbances or interferences are generated as a result of such facility.
   2. Salvage yards in accordance with Chapter 84.

§ 150- 32 Minimum area regulations for the Industrial District (I).

	Min. area Regulations for § 150-30 (A)	**Min. area regulations for § 150-30 (B) and §150-31 Conditional Uses.**
Lot size (sq. ft.)	40,000	80,000
Lot width (feet)	150	200
Lot Depth (feet)	150	200
Front yard (feet)	25	25
Side Yard (feet)	12	12
Rear yard (feet)	25	25
Maximum Height	50	50
Maximum impervious area	75%	75%

ARTICLE X Flood Hazard District

§ 150-33. Statutory Authorization
The Legislature of the Commonwealth of Pennsylvania has, by the passage of the Pennsylvania Flood Plain Management Act of 1978, delegated the responsibility to local governmental units to adopt floodplain management regulations to promote public health, safety, and the general welfare of its citizenry. Therefore, the Board of Supervisors of the Township of Antrim, Franklin County, Pennsylvania, does hereby order as follows.

§ 150-34. Purpose.
This district superimposes a zoning district on a district underlying it on the Antrim Township Zoning Map by establishing an additional set of standards and criteria which should be considered minimum requirements consistent within the district itself. Furthermore, the intent of this district is to:

A. Promote the general health, welfare and safety of the community.
B. Encourage the utilization of appropriate construction practices in order to prevent or minimize flood damage in the future.
C. Minimize danger to public health by protecting water supply and natural drainage.
D. Reduce financial burdens imposed on the community, its governmental units and its residents by preventing excessive development in areas subject to flooding.
E. Preserve the natural characteristics of designated flood-prone areas by preventing rapid water runoff to contribute to downstream flooding and by providing areas for groundwater absorption for maintenance of the surface water supply.

§ 150- 35. Administration

A. Designation of the Floodplain Administrator.
   The Zoning Officer is hereby appointed to administer and enforce Article X and is referred to herein as the Floodplain Administrator.
B. Duties and Responsibilities of the Floodplain Administrator.
   1. The Floodplain Administrator shall issue a Land Use Permit only after it has been determined that the proposed work to be undertaken will be in conformance with the requirements of Article X and all other applicable codes and ordinances.
   2. Prior to the issuance of any Land Use Permit, the Floodplain Administrator shall review

the application for the permit to determine if all other necessary government permits required by state and federal laws have been obtained, such as those required by the Pennsylvania Sewage Facilities Act (Act 1966-537, as amended); the Pennsylvania Dam Safety and Encroachments Act (Act 1978-325, as amended); the Pennsylvania Clean Streams Act (Act 1937-394, as amended); and the U.S. Clean Water Act, Section 404, 33, U.S.C. 1344. No permit shall be issued until this determination has been made.

3. During the construction period, the Floodplain Administrator or other authorized official shall inspect the premises to determine that the work is progressing in compliance with the information provided on the Land Use Permit application and with all applicable municipal laws and ordinances. He/she shall make as many inspections during and upon completion of the work as are necessary.
4. In the discharge of his/her duties, the Floodplain Administrator shall have the authority to enter any building, structure, premises or development in the identified floodplain area, upon presentation of proper credentials, at any reasonable hour to enforce the provisions of Article X.
5. In the event the Floodplain Administrator discovers that the work does not comply with the Land Use Permit application or any applicable laws and ordinances, or that there has been a false statement or misrepresentation by any applicant, the Floodplain Administrator shall revoke the Land Use Permit and report such fact to the Board of Supervisors for whatever action it considers necessary.
6. The Floodplain Administrator shall maintain all records associated with the requirements of Article X including, but not limited to, permitting, inspection and enforcement.
7. The Floodplain Administrator shall consider the requirements of the 34 PA Code and the 2006 IBC and the 2006 IRC or latest revisions thereof.

§ 150-36. Establishment of Flood Hazard District boundaries.
The identified floodplain area shall be any areas of the Township of Antrim, classified as special flood hazard areas (SFHAs) in the Flood Insurance Study (FIS) and the accompanying Flood Insurance Rate Maps (FIRMs) dated January 18, 2012 and issued by the Federal Emergency Management Agency (FEMA), or the most recent revision thereof. Including all digital data developed as part of the Flood Insurance Study.

The above referenced FIS and FIRMs, and any subsequent revisions and amendments are hereby adopted by the Township of Antrim and declared to be a part of Article X.

§ 150-37. Applicability of District regulations.

A. This district shall serve as an overlay to the existing underlying districts as shown on the Official Zoning Map, and the provisions for the Flood Hazard District shall serve as a supplement to those underlying districts.
B. Where there exists any conflict between the provisions of this Flood Hazard District and any underlying district, the more restrictive provision shall apply.
C. Article X supersedes any other conflicting provisions which may be in effect in identified floodplain areas. However, any other code provisions shall remain in full force and effect to the extent that those provisions are more restrictive. If there is any conflict between any of the provisions of Article X, the more restrictive shall apply.

§ 150-38. Determination of the one-hundred-year-flood elevation.

A. The A Area/District shall be those areas identified as an A Zone on the FIRM included in the FIS prepared by FEMA and for which no one hundred (100) year flood elevations have been provided. For the purpose of this section, the one-hundred-year-flood elevation shall be used as the basis for regulation. When available, information from federal, state and other acceptable sources shall be used to determine the one-hundred-year elevation, as well as a floodway area, if possible. When no other information is available, the one-hundred-year-flood elevation shall be determined by using a point on the boundary of the identified floodplain area which is nearest the construction site in question.
B. In lieu of the above, the Board of Supervisors may require the applicant to determine the elevation with hydrologic and hydraulic engineering techniques. Hydrologic and hydraulic analyses shall be undertaken only by professional engineers or others of demonstrated qualifications, who shall certify that the technical methods used correctly reflect currently accepted technical concepts. Studies, analyses, computations, etc. shall be submitted in sufficient detail to allow a thorough technical review by the Township Engineer.

§ 150-39. Alterations and improvements to watercourses.
No encroachment, alteration or improvement of any kind shall be made to any watercourse unless it can be shown that the activity will not reduce or impede the flood carrying capacity of the watercourse in any way. No encroachment, alteration or improvement of any kind shall be made to any watercourse until all adjacent municipalities which may be affected by such action have been notified by the Township and until all required permits and approvals have been first obtained from the Department of Environmental Protection, Bureau of Dams and Waterway Management. Also, notification shall be sent to FEMA.

§ 150-40. Changes and disputes in identification of area.
The identified floodplain area may be revised or modified by the Board of Supervisors where studies or data provided by a qualified agency or person document the need for such a revision. Additionally, as soon as practicable, but not later than six (6) months after the date such information becomes available, a community shall notify the FEMA of the changes by submitting technical or scientific data. Prior to any such change, approval shall be obtained from FEMA. Should any dispute concerning any identified floodplain boundary arise, initial determination shall be made by the Township Planning Commission and any party aggrieved by this decision may appeal to the Board of Supervisors. The burden of proof shall be on the appellant.

§ 150-41. Prohibited uses.
A. The commencement of any of the following activities; or the construction, enlargement or expansion of any structure used or intended to be used for any of the following activities is prohibited:
    (1) Hospitals.
    (2) Nursing homes.
    (3) Jails or prisons.
    (4) A new mobile home park or mobile home subdivision, or substantial improvements to an existing mobile home park or mobile home subdivision.
B. Development which may endanger human life. Any new or substantially improved structure which will be used for the production or storage of any of the following dangerous materials

or substances or which will be used for any activity requiring the maintenance of a supply (more than 100 pounds or 12 gallons or other comparable amount and any amount of radioactive substances and a maximum of 550 gallons of petroleum products) of any of the following dangerous materials or substances on the premises shall be prohibited:

Acetone
Ammonia
Benzene
Calcium carbide
Carbon disulfide
Celluloid
Chlorine
Hydrochloric acid
Hydrocyanic acid
Magnesium
Nitric acid and oxides of nitrogen
Pesticides (including insecticides, fungicides and rodenticides)
Petroleum products (gasoline, fuel oil, etc.)
Phosphorus
Potassium
Radioactive substances, insofar as such substances are not otherwise regulated
Sodium
Sulfur and sulfur products

§ 150-42. Application procedures and requirements.

A. If any proposed construction or development is located entirely or partially within any identified floodplain area, applicants for Land Use and/or building permits and/or subdivision and land development applications shall provide all the necessary information in sufficient detail and clarity to enable the Floodplain Administrator to determine that:
   1. All such proposals are consistent with the need to minimize flood damage and conform to the requirements of Article X and all other applicable codes and ordinances.
   2. All utilities and facilities, such as sewer, gas, electrical and water systems, are located and constructed to minimize or eliminate flood damage.
   3. Adequate drainage is provided so as to reduce exposure to flood hazards.
   4. Structures will be anchored to prevent floatation, collapse, or lateral movement.
   5. Building materials are flood-resistant.
   6. Appropriate practices that minimize flood damage have been used.
   7. Electrical, heating, ventilation, plumbing, air conditioning equipment, and other service facilities have been designed and/or located to prevent water entry or accumulation.

B. Applicants shall file the following minimum information plus other pertinent information may be required by the Floodplain Administrator to make the above determination:
   1. A complete application form.
   2. A plan of the entire site, clearly and legibly drawn at a scale of one inch being equal to 100 feet or less, showing the following:
      a. North arrow, scale and date.

b. Topographic contour lines.
c. All property and lot lines, including dimensions, and the size of the site expressed in acres or square feet.
d. The location of all existing and proposed buildings, structures and other improvements, including the location of any existing or proposed subdivision and land development.
e. The location of all existing streets, drives, and other access ways; and
f. The location of any existing bodies of water or watercourses, identified floodplain areas and, if available, information pertaining to the floodway, the flow of water, including direction and velocities.

3.Plans of all proposed buildings, structures and other improvements, drawn at a suitable scale, showing the following:
a. The proposed lowest floor elevation based upon North American Vertical Datum of 1988.
b. The elevation of the one-hundred-year flood.
c. The elevation of the base flood;
d. If available, information concerning flood depths, pressures, velocities, impact and uplift forces and other factors associated with the one-hundred-year flood.
e. Detailed information concerning any proposed flood proofing measures.
f. Supplemental information as may be necessary under 34 PA Code, the 2006 IBC or the 2006 IRC.

4.The following data and documentation:
a. A document, certified by a registered professional engineer, which states that the proposed construction or development has been adequately designed to withstand, pressures, velocities, impact and uplift forces associated with the base flood elevation. Such statement shall include a description of the type and extent of flood proofing measures which have been incorporated into the design of the structure and/or development.
b. Detailed information needed to determine compliance with Article X, to include:
(1) Amount, location and purpose of any material or substances referred heretofore which are intended to be used, produced, stored or otherwise maintained on site.
(2) Description of safeguards incorporated into the design of the proposed structure to prevent leaks or spills of any polluting or dangerous substance or material during the base flood.
c. The appropriate component of the Department of Environmental Protection's Planning Module for Land Development.
d. Where any excavation or grading is proposed, a plan meeting the requirements of the Department of Environmental Protection to implement and maintain erosion and sedimentation control.
e. If available, information concerning flood depths, pressures, velocities, impact and uplift forces and other factors associated with a base flood elevation; and
f. Detailed information concerning any proposed flood proofing measures and corresponding elevations.
g. Documentation, certified by a registered professional engineer or architect, to show that the cumulative effect of any proposed development within an Special Floodplain Area when combined with all other existing and anticipated development, will not

increase the base flood elevation more than one (1) foot at any point.

h.Detailed information needed to determine compliance with § 150-44:

(1) the amount, location and purpose of any materials or substances which are intended to be used, produced, stored or otherwise maintained on site.

(2) a description of the safeguards incorporated into the design of the proposed structure to prevent leaks or spills of the dangerous materials or substances during a base flood.

(a) The appropriate component of the Department of Environmental Protection's "Planning Module for Land Development."

(b) Where any excavation or grading is proposed, a plan meeting the requirements of the Department of Environmental Protection, to implement and maintain erosion and sedimentation control.

5. Applications for Permits shall be accompanied by a fee, payable to the municipality as set forth by Resolution of the Board of Supervisors.

§ 150-43. Required permits.

A. Land Use and/or Building permits shall be required before any construction or development is undertaken within any area of the Township and affected by this district. Such application shall contain the following:

1. Name and address of applicant.
2. Name and address of owner of land on which proposed construction is to occur.
3. Name and address of contractor.
4. Site location including address.
5. Listing of other permits required.
6. Brief description of proposed work and estimated cost, including a breakout of flood-related cost and the market value of the building before the flood damage occurred where appropriate.
7. A plan of the site showing the exact size and location of the proposed construction as well as any existing buildings or structures.

B. Prior to the issuance of any Land Use and/or Building permit, the Zoning Officer shall review the application for permit to determine if all other necessary government permits required by state and federal laws have been obtained, such as those required by the Pennsylvania Sewage Facilities Act (Act 1966-537, as amended); the Pennsylvania Dam Safety and Encroachment Act (Act 1978-325, as amended); and the U.S. Clean Water Act, Section 404, 33 U.S.C. Subsection 1334. No application shall be accepted by the Zoning Officer until this determination has been made.

§ 150-44. General regulations.

A. In the identified floodplain area, the development and/or use of land shall be permitted, provided that the development and/or use complies with the restrictions and requirements of Article X and all other applicable codes and ordinances in force in the Township.

B. Within any floodway area, no new construction or development shall be permitted that would cause any increase in the one-hundred-year-flood elevation.

C. Within Zones without a designated floodway, new development shall not be permitted unless it is demonstrated that the cumulative effect of all the past and projected development will not increase the BFE by more than 1 foot.

D. Within any identified floodplain area, no new construction or development shall be located within the area measured 50 feet landward from the top-of-bank of any watercourse unless a permit is obtained from the Department of Environmental Protection, Bureau of Dams and Waterways Management.

E. All subdivision proposals and development proposals containing at least 50 lots or at least 5 acres, whichever is the lesser, in flood hazard areas where base flood elevation data are not available, shall be supported by hydrologic and hydraulic engineering analyses that determine base flood elevations and floodway information. The analyses shall be prepared by a licensed professional engineer in a format required by FEMA for a Conditional Letter of Map Revision or Letter of Map Revision. Submittal requirements and processing fees shall be the responsibility of the applicant.

F. Within any identified floodplain area, the elevation of the lowest floor (including basement) of any new or substantially improved residential structure shall be 1 1/2 feet or more above the one-hundred-year-flood elevation.

G. The elevation of any new or substantially improved nonresidential structure within any identified flood plain area (including basement) shall be 1 ½ feet or more above the one-hundred – year flood elevation , or part thereof, having a lowest floor (including basement) which is not elevated to at least 1 1/2 feet or more above the one-hundred-year-flood elevation shall be flood proofed in a completely or essentially dry manner in accordance with the W1 and W2 space classification standards contained in the publication entitled "Flood-Proofing Regulations" published by the United States Army Corps of Engineers (June 1972) or with some other equivalent standard. All plans and specifications for such flood proofing shall be accompanied by a statement certified by a registered professional engineer or architect which states that the proposed design and methods of construction are in conformance with the above-related standards.

H. Enclosed areas below the lowest floor (including basement) are prohibited.

§ 150-45. Design and construction standards.

The following minimum standards shall apply for all construction and development within any identified floodplain area:

A. Fill. If fill is used, it shall:
   1. Extend laterally at least 15 feet beyond the building line from all points.
   2. Consist of soil or small rock materials only; sanitary landfills shall not be permitted.
   3. Be compacted to provide the necessary permeability and resistance to erosion, scouring or settling.
   4. Be no steeper than one vertical to two feet horizontal, unless substantiated data justifying steeper slopes is submitted to the Township Engineer for review and approved by the Board of Supervisors.
   5. Be used to the extent to which it does not adversely affect properties.

B. Drainage facilities. Storm drainage facilities shall be designed to convey the flow of stormwater runoff in a safe and efficient manner. The system shall ensure proper drainage along streets and provide positive drainage away from buildings. The system shall also be designed to prevent the discharge of excess runoff onto adjacent properties.

C. Water and sanitary sewer facilities and systems.

1. All new or replacement water and sanitary sewer facilities and systems shall be located, designed and constructed to minimize or eliminate flood damages and the infiltration of floodwaters.
2. Sanitary sewer facilities and systems shall be designed to prevent the discharge of untreated sewage into floodwaters.
3. No part of any on-site sewage system shall be located within any identified floodplain area except in strict compliance with all state and local regulations for such systems. If any such system is permitted, it shall be located so as to avoid impairment to it or contamination from it during a flood.

D. Other utilities. All other utilities, such as gas lines, electrical and telephone systems, shall be located, elevated (where possible) and constructed to minimize the chance of impairment during a flood.

E. Streets. The finished elevation of all new streets shall be no more than one foot below the regulatory flood elevation.

F. Storage. All materials that are buoyant, flammable, explosive or, in times of flooding, could be injurious to human, animal or plant life, and not listed in § 150-41B, Development which may endanger human life, shall be stored at or above the regulatory flood elevation and/or flood proofed to the maximum extent possible.

G. Placement of buildings and structures. All buildings and structures shall be designed, located and constructed so as to offer the minimum effect upon the flow and height of floodwater.

H. Anchoring.
1. All buildings and structures shall be firmly anchored in accordance with accepted engineering practices to prevent flotation, collapse or lateral movement.
2. All air ducts, large pipes, storage tanks and other similar objects or components located below the regulatory flood elevation shall be securely anchored or fixed to prevent flotation.

I. Floors, walls and ceilings.
1. Wood flooring used at or below the regulatory flood elevation shall be installed to accommodate a lateral expansion of the flooring, perpendicular to the flooring grain, without causing structural damage to the buildings.
2. Plywood used at or below the regulatory flood elevation shall be of a "marine" or water-resistant variety.
3. Walls and ceilings at or below the regulatory flood elevation shall be designed and constructed of materials that are water-resistant and will withstand inundation.
4. Windows, doors and other components at or below the regulatory flood elevation shall be made of metal or other water-resistant material.

J. Paints and adhesives.
1. Paints and other finishes used at or below the regulatory flood elevation shall be of a marine or water-resistant quality.
2. Adhesives used at or below the regulatory flood elevation shall be of a marine or water-resistant variety.
3. All wooden components (doors, trim, cabinets, etc.) shall be finished with a marine or other water-resistant paint or other finishing material.

K. Electrical components.

1. Electrical distribution panels shall be at least three feet above the one-hundred-year-flood elevation.
2. Separate electrical circuits shall serve lower levels and shall be dropped from above.

L. Equipment. Water heaters, furnaces, air-conditioning and ventilation units and other mechanical or utility equipment or apparatus shall not be located below the regulatory flood elevation.

M. Fuel supply systems. All gas and oil supply systems shall be designed to prevent the infiltration of floodwaters into the systems and discharges from the systems into floodwaters. Additional provisions shall be made for the drainage of these systems in the event that floodwater infiltration occurs.

§ 150-46. Special requirements for mobile homes.

A. Within any identified floodplain area, all mobile homes and any additions thereto shall be prohibited within the area measured 50 feet landward from the top-of-bank of any watercourse.

B. Where permitted within any identified floodplain area, all mobile homes and additions thereto shall be:
1. Placed on a permanent foundation.
2. Elevated so that the lowest floor of the mobile home is 1 1/2 feet or more above the elevation of the one-hundred-year flood.
3. Anchored to resist flotation, collapse or lateral movement.

§ 150-47 Special Requirements for Recreational Vehicles

A. Recreational vehicles in Zones A1-30, AH and AE must either
1. be on the site for fewer than 180 consecutive days,
2. be fully licensed and ready for highway use, or
3. meet the permit requirements for mobile homes in § 150-46

§ 150-48. Existing structures in identified floodplain areas.

Any structure existing prior to the enactment of Article X, as amended, may continue to remain, provided that:

A. Any modification, alteration, reconstruction or improvement of any kind to an existing structure, to an extent or amount of 50% or more of its market value, shall constitute a substantial improvement and shall be undertaken only in full compliance with the provisions of this district.

B. Any modification, alteration, reconstruction or improvement of any kind to an existing structure, to an extent or amount of less than 50% of its market value, shall be elevated and/or flood proofed to the greatest extent possible.

C. No expansion or enlargement of an existing structure shall be allowed within any floodway area that would cause any increase in the elevation of the one-hundred-year flood.

§ 150-49. Variances.

If compliance with any of the requirements of Article X would result in exceptional hardship to a prospective builder, developer or property owner, the Zoning Hearing Board may, upon request to the Zoning Hearing Board, grant relief from the strict application of the requirements of

Article X. Requests for a variance shall be made according to this chapter and the following procedure:

A. If granted, a variance shall involve only the least modification necessary to provide relief.

B. In granting any variance, the Zoning Hearing Board shall attach whatever reasonable conditions and safeguards it considers necessary in order to protect the public health, safety and welfare and to achieve the objectives of this chapter.

C. Whenever a variance is granted, the Zoning Hearing Board shall notify the applicant, in writing, that:
   1. The granting of the variance may result in increased premium rates for flood insurance.
   2. Such variance may increase the risks to life and property.

D. In reviewing any request for a variance, the Zoning Hearing Board shall consider, at a minimum, the following:
   1. That there is good and sufficient cause.
   2. That failure to grant the variance would result in exceptional hardship to the applicant.
   3. That the granting of the variance will:
      a. Neither result in an unacceptable or prohibited increase in flood heights, additional threats to public safety or extraordinary public expense;
      b. Nor create nuisances, cause fraud on or victimize the public or conflict with any other applicable state or local ordinances and regulations.

E. A complete record of all variance requests and related actions shall be maintained by the Zoning Hearing Board.

F. No variance shall be granted for any construction, development, use or activity within any floodway area that would cause any increase in the one-hundred-year flood.

G. No variance shall be granted for the uses or activities prohibited in § 150-41.

H. Notwithstanding any of the above, however, all structures shall be designed and constructed so as to have the capability of resisting the one-hundred-year flood.

I. The Zoning Hearing Board may, upon request from an applicant, consider the possibility of modifying the freeboard requirements of 1 1/2 feet above the one-hundred-year-flood elevation, provided that the applicant can demonstrate and the Zoning Hearing Board can determine that:
   1. There are unique physical circumstances, such as exceptional topographical or other existing natural or man-made conditions, peculiar to the property.
   2. Because of such physical circumstances and conditions, the proposed substantial improvement cannot be reasonably designed and constructed in compliance with the provisions of the applicable requirements and that a reduction is therefore necessary.
   3. Failure to grant the request will result in exceptional hardship to the applicant.
   4. Approval of the request will not result in increased flood heights within any designated floodway.
   5. Approval of the request will not result in any additional threat to the public health and safety or result in any extraordinary public expense or create any nuisance.
   6. Approval of the request will not result in any conflict with any other applicable laws or regulations.

J. In approving a request for a reduction in the required freeboard, the Zoning Hearing Board shall:

1. Authorize the least reduction necessary to provide relief.
2. Make notification.
   a. Notify the applicant, in writing, that approval of the request will:
      (1) Result in increased premium rates for flood insurance.
      (2) Increase risks to the structure, its contents and occupants.
   b. Such notification shall be included with the Township records.
3. Maintain a complete record of all requests which have been approved authorizing reductions in freeboard.
4. Report all such requests which have been approved in its annual report to the Pennsylvania Department of Community and Economic Development and FEMA.

§ 150-50. Appeals from decision of Zoning Officer.
In addition to the procedures for appeals as contained in this chapter, in any appeal pertaining to the boundaries of this district resulting from claims that the district has become incorrect because of changes either natural or man-made, the burden of proof shall be on the appellant. Such proof shall be based on a detailed report using either the Log Pearsons III Method, the Twenty-Four-Hour Evaluation Hydrograph or other commonly accepted methods of determining runoff.

§ 150-51. Municipal liability.
The granting of a Land Use and/or building or zoning permit or the approval of a subdivision or land development plan in this district shall not constitute a representation, guaranty or warranty of any kind by the Township, or any of its officials or employees, of the practicability or safety of any structure, use or development, and shall not create liability or cause of action against such public body, official or employee for any damage that may result pursuant thereto.

§ 150-52. Warning and Disclaimer of Liability.
The degree of flood protection sought by the provisions of Article X is considered reasonable for regulatory purposes and is based on acceptable engineering methods of study. Larger floods may occur or flood heights may be increased by man-made or natural causes, such as ice jams and bridge openings restricted by debris. Article X does not imply that areas outside any identified floodplain areas, or that land uses permitted within such areas will be free from flooding or flood damages.

Article X shall not create liability on the part of the Township of Antrim or any officer or employee thereof for any flood damages that result from reliance on Article X or any administrative decision lawfully made there under.

ARTICLE XI, Supplementary Regulations

§ 150- 53 . Exemptions.
A. Public utilities are permitted in all zoning districts as a permitted use. Public utilities shall not be required to comply with the minimum area regulations as set forth of the Code of the Township of Antrim Pennsylvania.
B. Historical and/or archeological properties are permitted in all zoning districts as a permitted use. Historical and/or archeological properties shall not be required to comply with the minimum area regulations of this Chapter.

§ 150-54 Buildings Housing Animals

A. A one-hundred (100) foot setback shall apply to buildings that house more animals or is greater in size than the number listed in the chart below.

Type of Animal	Animals per building	Building Sq. Ft.
Swine (hogs and pigs)	25	500
Cattle (cows, steers, heifers, calves, and bulls)	50	2000
Sheep and goats	50	600
Emus, Ostriches, Alpacas, Llamas	50	900
Horses (ponies, mules, and donkeys)	25	2500
Fowl (chickens, turkeys, ducks, and other birds)	100	400
Dogs and Cats	20	320

§ 150- 55 . Accessory building regulations.

A. Accessory buildings shall comply with the following regulations:
   1. Accessory buildings to a residential use shall have a minimum setback of five (5) feet from any side or rear lot line.
   2. Accessory buildings to principal uses other than residential shall not be located closer than ten (10) feet to any side or rear property line.
   3. The setbacks for accessory buildings that are adjacent to public, private or proposed road rights-of-way shall be the same as the setbacks listed in the minimum area regulations for front yard setbacks of each applicable zoning district.

B. When an accessory structure is attached to the principal building it shall comply in all respects with the requirements of this chapter applicable to the principal building.

C. An accessory structure shall conform to the height regulations for principal buildings.

§ 150- 56. Accessory Dwelling Units (ADU's)

Accessory dwelling units may be permitted in accordance with the following:

A. Density. One (1) accessory dwelling unit may be permitted on properties of at least one-half (½) acre in size. Additional accessory dwelling units may be permitted on properties of five (5) acres or greater at a density of one (1) unit per five (5) acres. No more than five (5) ADU's shall be permitted on a single property.

B. Size. Gross floor area of any ADU shall not exceed fifty (50) percent of the principal dwelling. Existing historic accessory buildings more than seventy-five (75) years old that exceed these floor space limits are permitted as ADU's without having to meet the dimensional setback requirements.

C. Location. ADU's shall comply with the minimum area regulations for the zoning district in which it is situated.

D. Permit issuance shall be contingent upon Township Sewage Enforcement Officer and Pennsylvania DEP Approval for any on site septic sewage disposal systems needed.

§ 150- 57. Height requirements.

A. Height shall be measured from the lowest door elevation to the peak of the roof.
B. Chimneys, flues, towers, spires, cupola domes, pole masts, antennas, Church Steeples, barns and silos shall be exempt from the height limitations of this chapter, provided that their location is not in the required yard.

§ 150- 58. Yard and lot regulations.

A. Corner lots.
   1. Front yards are yards on which the building fronts on the public or private road right-of-way and shall coincide with the property address, and the yard opposite of the front yard shall be deemed to be a rear yard, and the other (or others) side yards.
   2. No obstructions to vision shall be erected or maintained in the line of sight.
   3. Any principle structure, addition thereto, or accessory structure shall not be located closer to any private, public, or proposed road right of way than the front yard setback of the applicable zoning district.
B. Setback exemption. No proposed dwelling need have a setback greater than the average of the two (2) existing dwellings with the greatest setbacks located within one-hundred (100) feet on each side of said proposed dwelling on the same side of the street, within the same block and the same district. However, in no event shall the front yard be less than ten (10) feet.
C. Projections into required yards.
   1. Cornices, canopies, eaves, bay windows, balconies, uncovered stairways and necessary landings, and chimneys or other architectural features may project into yards a distance not exceeding a total of three (3) feet.
   2. Patios, deck, and open porches may be located in the required side and rear yards, provided that if the yard is adjacent to a private, public, or proposed road right-of-way the setbacks listed in the minimum area regulations for front yards of the applicable zoning district shall apply. Patios and open porches may not be located closer than ten (10) feet to any adjacent property line.
D. Existing small lots. A lot owned individually and separately and separated in ownership from any adjoining tracts of land on the effective date of this chapter and subsequent amendments, which has a total lot area or lot width less than prescribed in this chapter, may be used, provided such lot shall be developed in conformity with all applicable district regulations other than the minimum lot area, lot width, and side yards. Existing small lots meeting the above stipulation shall provide side and rear yards which may be proportionately reduced by the percentage that the existing small lot is less than the minimum Township standard. However, in no event shall each side yard be less than five (5) feet or rear yard less than twenty (20) feet
E. Through lots. Where a lot extends through from street to street, the applicable front yard regulations shall apply on both streets.
F. Waiver of yards. No side yard or rear yard shall be required where such yard abuts an operating railroad right-of-way.
G. Single-family semi-detached dwelling. A single family semi-detached dwelling shall satisfy zoning minimum area requirements on a single lot or on a combination of two lots. When two lots are used, only one side yard will be required on each lot and the total lot area of the

two lots shall meet the lot area requirement for the applicable zoning district. It will not be necessary to make each unit of a double unit equally sized.

H. Any yard abutting a public or private roadway, whether existing or proposed, shall comply with the front yard regulations.

§ 150-59. Private outdoor swimming pools.

A land use permit shall be required for the installation or construction of a private outdoor swimming pool subject to the following conditions:

A. The water edge of such pool shall not be located nearer than twenty (20) feet to any lot line for an in-ground pool or nearer than fifteen (15) feet for an aboveground pool. Swimming pools located adjacent to a public or private street shall have a minimum setback of fifty-feet (50) from the waters edge to the edge of the road right of way.
B. Wading pools less than two (2) feet in depth shall be exempt from this section.

§ 150-60. Storage of recreational vehicles, camping trailers, boats and dismantled or non-operable vehicles.

A. No more than two (2) recreational vehicles or camper trailers may be stored outside, but not occupied, on any individual residential lot.
B. No more than three (3) motorized boats may be stored outside on any individual residential lot.
C. The residential storage of not more than three (3) dismantled, non-operable or non-licensed vehicles as defined in this chapter shall be permitted provided they are concealed from view. For the purpose of this section, concealed may include covering the entire vehicle, installing a privacy fence, placing them in a building or the like. Any more than three dismantled, non-operable or non-licensed vehicles shall be stored in an enclosed building.

§ 150-61. Rural Enterprise.

Rural Enterprise may be permitted upon a property that is primarily used for agriculture.

A. The following are permitted under Rural Enterprise:
    1. Direct sale to the public of agricultural products produced principally on the farm, provided that at least fifty percent (50%) of such products are produced by the farm operator.
    2. Any and all production, primary processing, direct marketing and storage of agricultural products produced principally on the farm.
    3. The sale of agricultural goods, services, supplies, and repairs and/or the conduct of traditional trades, restaurants, and the production and sale of home occupation goods, arts and crafts, so long as these uses remain incidental to the agricultural character of the farm and are limited to occupying residential and/or principally agricultural structures of the property.
    4. The accommodation of tourists and visitors within principally family residential and/or agricultural structures otherwise permitted under the law so long as the accommodations of tourists and visitors is undertaken as part-time and is incidental to the agricultural character of the property.
    5. Activities including: hayrides, corn mazes, farm tours, pick-your-own crop events, seasonal celebrations, weddings, conferences and similar activities provided they are part-time and are incidental to the agricultural character of the property.

6. Other similar uses upon approval by the Board of Supervisors.

B. Rural Enterprise Regulations. Rural Enterprise shall comply with the following:
   1. A Zoning Permit shall be required. A written description of the business being proposed, and a sketch shall be submitted the Township for approval before beginning such operation.
   2. A Safe means of ingress and egress based on vehicle type and trips generated shall be provided.
   3. Adequate parking for intended use shall be provided.
   4. Federal, State, and local regulations for sanitation.
   5. Land Development regulations when required by improvements.

§ 150-62. Customary home occupations and No-impact Home-based Business.

A. Customary home occupations and professional offices or studios are permitted as an accessory use subject to the following provisions:
   1. Where permitted. Customary home occupations shall be permitted within a single-dwelling unit or in a building or other structure accessory to the dwelling unit, provided that not more than two (2) persons in addition to those persons residing in said dwelling are employed in the same home occupation.
   2. Evidence of use. The use shall not display or create outside the building any evidence of the home occupation, except that one (1) unanimated, non-illuminated flat sign having an area of not more than four (4) square feet shall be permitted on each street front of the zone lot on which the building is situated. No offensive noise, vibration, smoke, dust or odor shall be created.
   3. Area limitation. The use shall not occupy more than thirty percent (30%) of the floor area used for dwelling purposes.
   4. There shall be no display or sale of retail goods and no stockpiling or inventory of a substantial nature.
   5. All home occupations must register with the Township.

B. No-impact Home-Based Business.
   1. A No-impact Home-based Business shall be permitted as defined upon approval of a completed application.

§ 150-63. Homeowners' associations.

Whenever a developer or owner proposes to provide land or structures for the benefit of more than one (1) homeowner for a project and the costs are to be shared by more than one (1) owner such as common open space, active play areas, stormwater improvements etc.; a homeowners' association shall be established in accordance with the following provisions:

A. The homeowners' association shall be established as an incorporated organization operating under recorded land agreements through which each lot owner (and any succeeding owner) is automatically a member and each lot is automatically subject to a charge for a proportionate share of the expenses for the organization's activities. Additionally, specific provisions shall be established which define completely all membership requirements of all non-lot owners in the event that rental units are included in the project.

B. The homeowners' association's declaration of covenants, conditions and restrictions shall, at a minimum, establish the following:
   1. Property rights, including the owners' easements of enjoyment and delegation of use.

2. Membership and voting rights, including any distinction between membership classes.
3. Covenant for maintenance assessments, including the creation of the lien and personal obligation of assessments, purpose of assessments, the maximum annual assessments, special assessments for capital improvements, uniform rate of assessment, due dates, effect of nonpayment of assessments and subordination of the lien to mortgages.
4. Architectural and exterior maintenance control.
5. General provisions, including enforcement, amendments and property annexation procedures.

C. The developer or owner shall assume all responsibility for the homeowners' association until seventy-five percent (75%) of the dwelling lots are sold or until such time as the homeowners formally assume such responsibility. Once the homeowners' association is established, the developer or owner shall be responsible for payment of dues to the homeowners' association for lots which he or she owns.

D. Staged developments. If the developer or owner proposes to construct the project over a period of separate stages, the homeowners' association shall also be staged consistent with the development time schedule.

E. The declaration of covenants, conditions and restrictions of the Homeowners Association shall state that the Township of Antrim shall not be responsible in any manner concerning the Homeowner's Association, including, but not limited to the maintenance responsibilities for the common improvements in the development.

F. Review. The articles of incorporation and all declarations of covenants, conditions and restrictions of the homeowners' association shall be subject to review by the Township Solicitor.

G. Recording. The Homeowners Association Documents shall be recorded and properly indexed at the Franklin County Register and Recorder's office before any land use permits can be applied for.

§ 150-64. Signs.

A. Purpose.

The intent of this Article is to provide for the regulation of signs to protect the public, health, safety, and welfare in accordance with the following activities.

1. To regulate the size, location, illumination, alteration, and maintenance of signs and reduce the hazards to pedestrian and vehicular traffic.
2. To prohibit the construction of and require the removal of signs which are hazardous or create sign clutter.
3. To provide opportunities for a variety of sign types and encourage sign designs which meet agricultural, residential, and business needs in a manner which is compatible with the locality, enhances the economic value and visual character of the properties, and contributes to rather than detracts from the character of the Township.
4. To establish a process for the review and approval of sign permit applications.

B. General regulations apply to all signs.

1. No sign shall be erected, structurally altered, relocated or changed without first obtaining a land use permit unless specifically exempt by § 150-64(D).
2. No sign shall be located in the established right-of-way of any street.
3. No sign shall exceed the established height limitations of the applicable district where located.

4. Sign height shall be measured from the existing ground elevation to the highest point of the sign structure.
5. Signs shall not project across property lines.
6. All temporary or permanent signs shall be removed within thirty (30) days after the circumstances leading to their erection no longer apply. After the thirty (30) day period, the Township may remove any such sign and charge the property owner for the costs incurred.
7. All signs shall be constructed of durable materials and kept in good condition and repair.
8. Lighted signs shall not glare or shine into traffic or neighboring properties. Flood lighting shall not spill off of sign.
9. Double faced signs, a sign with a sign face message on both sides, shall be counted as a single sign.
10. Only one (1) freestanding or ground sign shall be permitted per road frontage per property.
11. Off site signs shall have written permission from the property owner acknowledging its placement, maintenance, and compliance with all regulations is the property owner's responsibility.
12. Single signs advertising multiple businesses on one parcel or within a business park or professional center shall be exempt from size limitations when located at the entrance provided all other regulations are met. Such sign shall not be considered a billboard.

C. Prohibited signs. The following types of signs shall be prohibited:
1. Signs which use words such as "STOP," "LOOK," "DANGER," "YIELD" or any similar words, phrases, symbols, lights or characters in such a manner as to interfere with or mislead or confuse traffic.
2. Signs which by reason of size, location, coloring, or manner of illumination obstruct the vision of drivers, including but not limited to:
   a. Signs erected in the line of sight.
   b. Signs obstructing vision when entering or leaving a roadway from a driveway.
   c. Signs detracting from the visibility or effectiveness of any traffic sign or signal on public streets or roads.
3. Signs illuminated by flashing, intermittent or rotating lights.
4. Signs containing obscene, indecent or immoral words, pictures, or descriptions.
5. Signs imitating governmental signs, including traffic control signs.
6. Any sign that is unsafe or insecure, abandoned, or in a dilapidated condition.

D. Exempt Signs. No Land Use Permit is needed before erecting the following signs. Exempt signs shall conform to all other regulations.
1. Official federal, state, county, or township signs.
2. Public service signs such as those advertising the location of restrooms, telephones or similar public conveniences and signs advertising meeting times and places of nonprofit service or charitable clubs or organizations provided they shall not exceed four (4) square feet.
3. Entrance signs or directional signs for the purpose of directing traffic when erected on the property in which it serves as long as it does not exceed 8 square feet.
4. Temporary signs for civic events.
5. Political signs.
6. Real Estate signs.

7. Trespassing signs or signs indicating the private nature of a road, driveway or premises, signs prohibiting or otherwise controlling hunting or fishing upon particular premises, and signs indicating ownership of a property, provided the sign area does not exceed four (4) square feet.
8. Window signs.
9. Revolving barbershop pole sign, provided that it does not exceed thirty-six (36) inches in height.
10. Signs advertising the variety of crop growing in a field.
11. Canopy or awning signs.
12. Balloons, inflatable devices, pennants, bunting or banners.

E. Sign types. The following regulations shall apply to the specific sign type as defined in section § 150-4 .

1. Freestanding Signs.
   a. The lowest edge of a freestanding sign shall be less than four (4) feet or greater than (7) feet above the ground.
   b. One (1) freestanding sign shall be permitted per road frontage.
   c. Freestanding signs shall not exceed fifty (50) square feet.
2. Ground signs.
   a. Ground signs shall be supported and permanently placed by embedding, anchoring, or connecting the sign in such a manner as to incorporate it into the landscape or architectural design scheme.
   b. Ground signs shall be limited to one (1) such sign per road frontage.
   c. Ground signs shall not exceed fifty (50) square feet.
3. Projecting signs.
   a. Projecting signs shall be permitted and shall be attached to a wall and project no more than four (4) feet from the building wall.
   b. Projecting signs shall be securely supported and fastened to the wall.
   c. Projecting signs shall be a minimum of eight (8) feet from ground level.
4. Wall signs.
   a. No portion of a wall sign shall extend more than six (6) inches from the building wall.
5. Roof signs.
   a. One roof sign per building shall be permitted.
   b. Roof signs shall be no more than four (4) feet higher than the highest eave of the roof.
6. Billboards. Any free standing sign larger than fifty (50) square feet shall be considered a billboard and are subject to the following regulations.
   a. No Billboard shall be closer than fifty (50) feet to any property line or right-of-way line of any street.
   b. No Billboard face shall exceed eight (8) feet in vertical measurement or sixteen (16) feet in length and the bottom shall be less than four (4) feet or shall be higher than (7) feet above the ground.
   c. Billboards along the interstate shall conform to interstate regulations.
   d. No Billboard shall be located within five hundred (500) feet of any interchange or intersection.
   e. No Billboard shall be within a five-hundred (500) feet of another billboard.
   f. Stacking of billboards shall not be permitted.

g. Any Billboard that does not have advertising for more than one (1) year shall be removed.

F. Removal of unsafe, unlawful, or abandoned signs.
   1. Upon written notice by the Township, the owner, person, or firm maintaining a sign must remove or repair said sign when it:
      a. becomes unsafe, is in danger of falling, or it becomes so deteriorated that it no longer serves a useful purpose of communication;
      b. is determined by the Township to be a nuisance;
      c. is unlawfully erected in violation of any of the provisions of this Article.
   2. The Township may remove or cause to be removed said sign at the expense of the property owner in the event the property owner has not complied with the terms of said notice within fourteen (14) days of the date of the notice. However, in the event of danger, the Township may remove said sign immediately at the property owner's expense upon the issuance of said notice to the property owner.
   3. Abandoned Signs.
      a. No person shall maintain or permit to be maintained on any premises owned or controlled by such person a sign which has been abandoned.
      b. The Township may remove or cause to be removed said sign at the expense of the property owner in the event the property owner has not complied with the terms of said notice within thirty (30) days of the notice.

G. Nonconforming signs. Any sign legally existing at the time of the passage of this Article that does not conform in use, location, height, or size with the regulations shall be considered a legal non-conforming use or structure and may continue in such status until such time as it is either abandoned or removed by its owner, subject to the following limitations:
   1. Structural alterations, enlargement or re-erection are permissible only where such alterations will not increase the degree of nonconformity of the sign.
   2. Any legal nonconforming sign shall be brought into compliance if such sign is allowed to deteriorate to the extent that the cost of repair or restoration exceeds fifty (50%) percent of the replacement cost of the sign as determined by the Township.

§ 150- 65. Temporary mobile home permit.

A. Granny Flat: A mobile home may be temporarily placed on an approved lot having erected thereon no more than one (1) single-family dwelling where the mobile home is connected to the sewage disposal system of the permanent dwelling and where the temporary mobile home is to be occupied by the following family members: father, mother, father-in-law, mother-in-law, paternal grandparents, maternal grandparents, foster parents, aunt (mother's or father's sister), uncle (mother's or father's brother), son or daughter (step, adopted, or biological), brother or sister of the owner and occupant of the permanent residence on the lot; such occupancy of the temporary mobile home to be by special permit only for a period not to exceed one (1) year, renewable at the option of the Township; all such permits to expire and be subject to renewal on July 1 of each year regardless of the date of issuance. A signed statement will be required from a medical doctor as to the need prior to a land use permit being issued.

B. Sales Trailers: One (1) sales trailer shall be permitted per builder in a subdivision. Sales trailers shall be on their own lot placed within the minimum area regulations and shall be removed when the developer no longer owns any other lot in the development. Adequate

parking shall be provided. The sales trailer shall not be serviced with water, sewer, or septic unless appropriate permits have been issued and all fees have been paid. All fee's shall be forfeited and are non transferable with the removal of the trailer(s). Sales Trailers are not required to connect to utilities.

C. Construction Trailers: Each builder of a subdivision may have construction trailer(s) placed somewhere in the development within the minimum area regulations set forth in this chapter. The construction trailer(s) shall be removed from the premises once the development is built out or once the builder has not been active for a period of eighteen (18) months in this development. The construction trailer(s) shall not be serviced with water, sewer, or septic unless appropriate permits have been issued and all fees have been paid. All fee's will be forfeited and are non transferable with the removal of the trailer(s). Construction Trailers are not required to connect to utilities.

D. Where a land use permit has been issued for the construction or alteration of a principal building, a temporary permit for one (1) manufactured home or camping trailer may be issued. Said residence may be occupied during the term of the temporary permit, and shall be situated upon the lot for which the land use permit has been issued, provided that all yard setback requirements are met. Upon completion of the principal structure and the occupancy permits for the principal structure have been issued; the manufactured home or camping trailer shall be removed within ninety (90) days.

ARTICLE XII, Nonconforming Uses and Buildings

§ 150-66. Definitions and use provisions.

A. The definitions of "nonconforming lot," "nonconforming use" and "nonconforming structure" shall be as set forth in § 150-4.

B. Use provisions. Any nonconforming lot, use of land, structure, or combination thereof may be continued, subject to the following:
   1. The use shall not be moved to another location where such use would be nonconforming.
   2. The use shall not be changed to another nonconforming use without first obtaining approval by the Zoning Hearing Board in accordance with § 150-67 herein.
   3. The use shall not be reestablished unless in accordance with § 150-68, if such use has been discontinued for a period of one year or more.

§ 150-67. Expansion and/or change of nonconforming lots, uses, or structures.

A. Lots. Nonconforming lots may be used in accordance with § 150- 58(B) entitled "Setback exemption". Lots may be expanded without appearing before the Zoning Hearing Board as long as it is decreasing the degree of nonconformity.

B. Uses.
   1. Any person seeking permission to change a nonconforming use to any other nonconforming use shall sufficiently document to the Zoning Hearing Board that such new nonconforming use is more in compliance with the applicable provisions of this chapter than the present nonconforming use.
   2. Any expansion of a non residential non conforming use shall apply to the Zoning Hearing Board.

3. The Zoning Hearing Board may attach additional conditions when approving the expansion or change of a nonconforming use for the purpose of promoting the objectives and intent of this chapter.

C. Buildings and Structures.
   1. Any nonconforming structure or building, but not including signs, may be expanded, reconstructed, or structurally altered without applying to the Zoning Hearing Board, provided that a land use permit has been applied for and issued showing that the distance from the property line to the expansion shall not be less than the current nonconforming portion of the structure or building.
   2. Any expansion of nonconformity not covered by subsection (C)(1) above shall apply to the Zoning Hearing Board for approval before a building permit or land use permit may be issued.
   3. Any expansion or alteration of any building or structure that would create a non conforming building or structure must apply to the Zoning Hearing Board for approval before a building permit or land use permit may be issued.

D. Repair. Any nonconforming use or structure which is destroyed by fire, casualty or act of God may be repaired, rebuilt and used as before, provided that no increase in the degree of nonconformity is thereby created. All repairs shall be commenced within one year after the damage occurs or such use or structure shall not be rebuilt except as a conforming use or structure.

E. Standards. Each application for an expansion or change of a nonconforming use, building or structure shall be subject to the following standards:
   1. It shall be the responsibility of the applicant to sufficiently document to the Zoning Hearing Board that the proposed expansion or change will not be contrary to the purposes of this chapter and the public health, safety and welfare of Township residents in general and of the residents of the immediate area in particular.
   2. Such expansion or change shall not extend beyond the lot lines existing on the date the chapter or its subsequent amendments were adopted.

§ 150-68. Discontinuance.

Any person desiring to temporarily discontinue a nonconforming use may do so and may resume the same within one (1) year after such discontinuance, provided that such person has notified the Township in writing of his or her intention to do so within thirty (30) days after the use is discontinued. A discontinued use will not be deemed to be resumed unless such use is operated on a regular basis for six (6) months after such resumption begins.

§ 150-69. Repairs and maintenance.

Notwithstanding any of the above regulations, nothing in this chapter shall be deemed to prevent normal maintenance and repair of any nonconforming use or structure.

§ 150-70. Registration of nonconforming use.

All lawful uses existing at the effective date of this chapter which do not conform to the requirements set forth in this chapter, or any other amendments thereto, shall be identified and registered by the Zoning Officer.

§ 150-71. Mineral extraction.

Property acquired for the purpose of extracting sand, gravel, slate or other minerals there from and held for such purpose on the effective date of this chapter shall be considered in use for such extraction whether or not such extraction has actually commenced, and extraction, including erection of any necessary buildings or structures incidental to the extraction or processing of the deposits, will be allowed to commence and continue. In order for property to qualify hereunder, the following conditions must be documented by the landowner as evidence that the property was acquired and held for the purpose of later mineral extraction:

A. The land was acquired prior to the effective date of this chapter.
B. The land was acquired and is owned by an individual, corporation or otherwise engaged at the time of acquisition in the business of mineral extraction.
C. The property has not been permanently developed, in whole or in part, for any purpose other than mineral extraction or processing.
D. The land contains mineral deposits of a demonstrable economic value.

ARTICLE XIII, Zoning Hearing Board

§ 150-72. Creation; membership regulations.

A. There is hereby created for the Township a Zoning Hearing Board in accordance with the provisions of Article IX of the Pennsylvania Municipalities Planning Code, 53 P.S. § 10901 et seq.
B. The membership of the Board shall consist of five (5) residents of the Township appointed by resolution by the Board of Supervisors. The terms of office shall be five (5) years and shall be so fixed that the term of office of at least one (1) member shall expire each year. The Board shall promptly notify the Board of Supervisors of any vacancies which occur. Appointments to fill vacancies shall be only for the unexpired portion. Members of the Board shall hold no other office in the Township.
C. Any Board member may be removed for malfeasance, misfeasance or nonfeasance in office or for other just cause by a majority vote of the Board of Supervisors which appointed the member, taken after the member has received fifteen (15) days advance notice of the intent to take such a vote. A hearing shall be held in accordance with the vote if the member shall request it in writing.
D. The Board shall elect from its own membership its officers, who shall serve annual terms as such and may succeed themselves. For the conduct of any hearing and the taking of any action, a quorum shall be not less than a majority of all the members of the Board, but the Board may appoint a hearing officer from its own membership to conduct any hearing on its behalf and the parties may waive further action by the Board as provided in this chapter.
E. The Board may make, alter and rescind rules and forms for its procedure, consistent with ordinances of the Township and laws of the commonwealth. The Board shall keep full public records of its business, which records shall be the property of the Township, and shall submit a report of its activities to the Board of Supervisors as requested by the Board of Supervisors.
F. Within the limits of funds appropriated by the Board of Supervisors, the Board may employ or contract for secretaries, clerks, legal counsel, consultants and other technical and clerical services. Members of the Board may receive compensation for the performance of their duties as may be fixed by the Board of Supervisors, but in no case shall it exceed the rate of compensation authorized to be paid to the members of the Board of Supervisors.

G. The Board of Supervisors may appoint by resolution at least one but no more than three (3) residents of the Township to serve as alternate members of the Board. The term of office of an alternate member shall be three (3) years. When seated pursuant to Subsection H hereof, an alternate shall be entitled to participate in all proceedings and discussions of the Board to the same and full extent as provided by law for Board members, including specifically the right to cast a vote as a voting member during the proceedings, and shall have all the powers and duties set forth in this chapter and as otherwise provided by law. Alternates shall hold no other office in the Township, including Zoning Officer and member of the Planning Commission. Any alternate may participate in any proceeding or discussion of the Board but shall not be entitled to vote as a member of the Board nor be compensated unless designated as a voting alternate member pursuant to Subsection H.

H. If, by reason of absence or disqualification of a member, a quorum is not reached, the Chairman of the Board shall designate as many alternate members of the Board to sit on the Board as may be needed to provide a quorum. Any alternate member of the Board shall continue to serve on the Board in all proceedings involving the matter or case for which the alternate was initially appointed until the Board has made a final determination of the matter or case. Designation of an alternate pursuant to this section shall be made on a case-by-case basis in rotating accordance to declining seniority among all the alternates.

§ 150-73. Hearings.

The Zoning Hearing Board shall conduct hearings and make decisions in accordance with the following requirements:

A. Public notice shall be given and written notice shall be given to the applicant, the Zoning Officer and to any person who has made timely request for the same. Written notices shall be given at such time and in such manner as shall be prescribed by the rules of the Board. In addition to the written notice provided herein, written notice of said hearing shall be conspicuously posted on the affected tract of land at least one (1) week prior to the hearings.

B. The hearing shall be held within sixty (60) days from the date of the applicant's request, unless the applicant has agreed in writing to an extension of time.

C. The hearings shall be conducted by the Board or the Board may appoint any member as a hearing officer. The decision, or, where no decision is called for, the findings shall be made by the Board; however, the appellant or the applicant, as the case may be, in addition to the Township, may, prior to the decision of the hearing, waive decision or findings by the Board and accept the decision or findings of the hearing officer as final.

D. The parties to the hearing shall be the Township, any person affected by the application who has made timely appearance of record before the Board, and any other person, including civic or community organizations, permitted to appear by the Board. The Board shall have the power to require that all persons who wish to be considered parties enter appearances in writing on forms provided by the Board for that purpose.

E. The Chairman or Acting Chairman of the Board or the hearing officer presiding shall have power to administer oaths and issue subpoenas to compel the attendance of witnesses and the production of relevant documents and papers, including witnesses and documents requested by the parties.

F. The parties shall have the right to be represented by counsel and shall be afforded the opportunity to respond and present evidence and argument and cross-examine adverse witnesses on all relevant issues.

G. Formal rules of evidence shall not apply, but irrelevant, immaterial or unduly repetitious evidence may be excluded.

H. The Board or the hearing officer, as the case may be, shall keep a stenographic record of the proceedings. The appearance fee for a stenographer shall be shared equally by the applicant and the Board. The cost of the original transcript shall be paid by the Board if the transcript is ordered by the Board or hearing officer or shall be paid by the person appealing from the decision of the Board if such appeal is made, and in either event the cost of additional copies shall be paid by the person requesting such copy or copies. In other cases the party requesting the original transcript shall bear the cost thereof.

I. The Board or the hearing officer shall not communicate, directly or indirectly, with any party or his or her representatives in connection with any issue involved except upon notice and opportunity for all parties to participate, shall not take notice of any communication, reports, staff memoranda or other materials, except advice from their solicitor, unless the parties are afforded an opportunity to contest the material so noticed and shall not inspect the site or its surroundings after the commencement of hearings with any party or his or her representative unless all parties are given the opportunity to be present.

J. The Board or the hearing officer, as the case may be, shall render a written decision or, when no decision is called for, make a written finding on the application within forty-five (45) days after the last hearing before the Board or hearing officer. Where the application is contested or denied, each decision shall be accompanied by findings of fact and conclusions based thereon together with the reasons therefore. Conclusions based on any provision of this chapter or of any law, ordinance, rule or regulation shall contain a reference to the provision relied on and the reason why the conclusion is deemed appropriate in light of the facts found. If the hearing is conducted by a hearing officer and there has been no stipulation that his or her decision or findings are final, the Board shall make his or her report and recommendations available to the parties within forty-five (45) days, and the parties shall be entitled to make written representations thereon to the Board prior to final decision or entry of findings, and the Board's decision shall be entered no later than thirty (30) days after the report of the hearing officer. Where the Board fails to render the decision within the period required by this subsection or fails to hold the required hearing, the decision shall be deemed to have been rendered in favor of the applicant unless the applicant has agreed in writing or on the record to an extension of time. When a decision has been rendered in favor of the applicant because of the failure of the Board to meet or render a decision as hereinafter provided, the Board shall give public notice of said decision within ten (10) days from the last day it could have met to render a decision in the same manner as provided in Subsection A of this section. If the Board shall fail to provide such notice, the applicant may do so. Nothing in this subsection shall prejudice the right of any party opposing the application to appeal the decision to a court of competent jurisdiction.

K. A copy of the final decision or, where no decision is called for, of the findings shall be delivered to the applicant personally or mailed to him or her not later than the day following its date. To all other persons who have filed their name and address with the Board not later than the last day of the hearing, the Board shall provide by mail or otherwise brief notice of the decision or findings and a statement of the place at which the full decision or findings may be examined.

L. The Board of Supervisors shall establish, by resolution, fees with respect to hearings before the Zoning Hearing Board.

§ 150-74. Jurisdiction.

A. The Zoning Hearing Board shall have exclusive jurisdiction to hear and render final adjudications in the following matters:
   1. Substantive challenges to the validity of any land use ordinance, except those brought before the Board of Supervisors pursuant to Subsections 609.1 and 916.1(a)(2) of the Pennsylvania Municipalities Planning Code (hereinafter "MPC"), 53 P.S. §§ 10609.1 and 10916.1.
   2. Challenges to the validity of a land use ordinance raising procedural questions or alleged defects in the process of enactment or adoption, which challenges shall be raised by an appeal taken within thirty (30) days after the effective date of said ordinance. Where the ordinance appealed from is the initial zoning ordinance of the Township and a Zoning Hearing Board has not been previously established, the appeal raising procedural questions shall be taken directly to court.
   3. Appeals from the determination of the Zoning Officer, including but not limited to the granting or denial of any permit or failure to act on the application therefore, the issuance of any cease and desist order or the registration or refusal to register any nonconforming use, structure or lot.
   4. Appeals from a determination by the Township Engineer or the Zoning Officer with reference to the administration of any floodplain or flood hazard ordinance or such provisions within a land use ordinance.
   5. Applications for variances from the terms of this chapter and flood hazard ordinance or such provisions within a land use ordinance, pursuant to Section 910.2 of the MPC, 53 P.S. § 10910.2.
   6. Appeals from the Zoning Officer's determination under Section 916.2 of the MPC, 53 P.S. § 10916.2.
   7. Appeals from the determination of the Zoning Officer or Township Engineer in the administration of any land use ordinance or provision thereof with reference to sedimentation and erosion control and stormwater management insofar as the same relate to development not involving applications under Article V or VII of the MPC, 53 P.S. §§ 10501 et seq. and 10701 et seq.

B. The Board of Supervisors shall have exclusive jurisdiction to hear and render final adjudications in the following matters:
   1. All applications for approvals of planned residential development under Article VII of the MPC, pursuant to the provisions of Section 702 of the MPC, 53 P.S. § 10702.
   2. All applications pursuant to Section 508 of the MPC, 53 P.S. § 10508, for approval of subdivisions or land developments under Article V of the MPC, 53 P.S. § 10501 et seq.
   3. Applications for conditional uses under the express provisions of this chapter.
   4. Applications for curative amendments to this chapter or pursuant to Sections 609.1 and 916.1(a) of the MPC, 53 P.S. §§ 10609.2 and 10916.1(a).
   5. All petitions for amendments to land use ordinances, pursuant to the procedures set forth in Section 609 of the MPC, 53 P.S. § 10609.
   6. Appeals from the determination of the Zoning Officer or the Township Engineer in the administration of any land use ordinance or provisions thereof with reference to sedimentation and erosion control and stormwater management insofar as the same relate to applications for land development under Article V and VII of the MPC, 53 P.S.

§§ 10501 et seq. and 10701 et seq. Where such determination relates only to development not involving an Article V or VII application, the appeal from such determination of the Zoning Officer or the Township Engineer shall be to the Zoning Hearing Board pursuant to this section. Where the applicable land use ordinance vests jurisdiction for final administration of subdivision and land development applications in the Planning Commission, all appeals from determinations under this subsection shall be to the Planning Commission and all appeals from the decision of the Planning Commission shall be to court.

§ 150-75. Variance.

A. The Zoning Hearing Board shall hear requests for variances where it is alleged that the provisions of this chapter inflict unnecessary hardship upon the applicant. The Board may by rule prescribe the form of application and may require preliminary application to the Zoning Officer. The Board may grant a variance, provided that all of the following findings are made where relevant in a given case:
   1. That there are unique physical circumstances or conditions, including irregularity, narrowness or shallowness of lot size or shape, or exceptional topographical or other physical conditions peculiar to the particular property and that the unnecessary hardship is due to such conditions and not the circumstances or conditions generally created by the provisions of this chapter in the neighborhood or district in which the property is located.
   2. That because of such physical circumstances or conditions, there is no possibility that the property can be developed in strict conformity with the provisions of this chapter and that the authorization of a variance is therefore necessary to enable the reasonable use of the property.
   3. That such unnecessary hardship has not been created by the applicant.
   4. That the variance, if authorized, will not alter the essential character of the neighborhood or district in which the property is located, nor substantially or permanently impair the appropriate use or development of adjacent property, nor be detrimental to the public welfare.
   5. That the variance, if authorized, will represent the minimum variance that will afford relief and will represent the least modification possible of the regulation in issue.
B. In granting any variance, the Board may attach such reasonable conditions and safeguards as it may deem necessary to implement the purposes of this chapter and the Pennsylvania Municipalities Planning Code, 53 P.S. § 10101 et seq.
C. Applications for variances under this section will require a scaled drawing showing topographical features.

§ 150-76. Parties appellant before the Board.

Appeals raising the substantive validity of any land use ordinance (except those to be brought before the Board of Supervisors pursuant to the Pennsylvania Municipalities Planning Code), procedural questions or alleged defects in the process of enactment or adoption of a land use ordinance; or from the determination of the Zoning Officer, including but not limited to the granting or denial of any permit, or failure to act on the application therefore, the issuance of any cease and desist order or the registration or refusal to register any nonconforming use, structure or lot; from a determination by the Township Engineer or the Zoning Officer with reference to the administration of any floodplain or flood hazard ordinance or such provisions within a land

use ordinance; from the determination of any officer or agency charged with the administration of any transfers of development rights or performance density provisions of this chapter; from the determination of the Zoning Officer or Township Engineer in the administration of any land use ordinance or provision thereof with reference to sedimentation and erosion control and stormwater management insofar as the same relate to development not involving subdivision and land development or planned residential development may be filed with the Zoning Hearing Board in writing by the landowner affected, any officer or agency of the Township, or any person aggrieved. Requests for a variance may be filed with the Board by any landowner or any tenant with the permission of such landowner.

§ 150-77. Time limitations.

A. No person shall be allowed to file any proceeding with the Zoning Hearing Board later than thirty (30) days after an application for development, preliminary or final, has been approved by the Township if such proceeding is designed to secure reversal or to limit the approval in any manner unless such person alleges and proves that he or she had no notice, knowledge or reason to believe that such approval had been given. If such person has succeeded to his or her interest after such approval, he or she shall be bound by the knowledge of his or her predecessor in interest. The failure of anyone other than the landowner to appeal from an adverse decision on a tentative plan or from an adverse decision by the Zoning Officer on a challenge to the validity of this chapter or an amendment hereto or map or an amendment thereto shall preclude an appeal from a final approval except in the case where the final submission substantially deviates from the approved tentative approval.
B. All appeals from determinations adverse to the landowner shall be filed by the landowner within thirty (30) days after notice of the determination is issued.

§ 150-78. Stay of proceedings.

A. Upon filing of any appeal proceeding before the Zoning Hearing Board and during its pendency before the Board, all land development pursuant to any challenged ordinance, order or approval of the Zoning Officer or of any agency or body and all official action thereunder shall be stayed unless the Zoning Officer or any other appropriate agency or body certifies to the Board facts indicating that such stay would cause imminent peril to life or property, in which case the development or official action shall not be stayed otherwise than by a restraining order, which may be granted by the Board or by the Zoning Officer or other appropriate agency or body. When an application for development, preliminary or final, has been duly approved and proceedings designed to reverse or limit the approval are filed with the Board by persons other than the applicant, the applicant may petition the court having jurisdiction of zoning appeals to order such persons to post bond as a condition to continuing the proceedings before the Board.
B. After the petition is presented, the court shall hold a hearing to determine if the filing of the appeal is frivolous. At the hearing, evidence may be presented on the merits of the case. It shall be the consideration of all evidence presented, if the court determines that the appeal is frivolous, it shall grant the petition for a bond. The right to petition the court to order the appellants to post bond may be waived by the appellee, but such waiver may be revoked by him or her if an appeal is taken from a final decision of the court.

C. The question whether or not such petition should be granted and the amount of the bond shall be within the sound discretion of the court. An order denying a petition for bond shall be interlocutory. An order directing the responding party to post a bond shall be interlocutory.
D. If an appeal is taken by a respondent to the petition for a bond from an order of the court dismissing a zoning appeal for refusal to post a bond and the appellate court sustains the order of the court below to post a bond, the respondent to the petition for a bond, upon motion of the petitioner and after hearing in the court having jurisdiction of zoning appeals, shall be liable for all reasonable costs, expenses and attorney fees incurred by the petitioner.

§ 150-79. Conditional uses.

A. Objectives. On application, and after a public hearing by the Supervisors and recommendations by the Planning Commission, the Supervisors may authorize the issuance of land use permits and/or approval for any of the conditional uses which this chapter requires in the district in which such use is proposed to be located. In approving any such use, the Supervisors shall take into consideration the public health, safety and welfare, the comfort and convenience of the public in general and of the residents of the immediate neighborhood in particular, and may prescribe appropriate conditions and safeguards as may be required in order that the result of its action may, to the extent possible, further the expressed intent of this chapter and the accomplishments of the following objectives in particular:
   1. That all proposed structures, equipment or materials shall be readily accessible for fire and police protection.
   2. That the proposed use shall be of such location, size and character that, in general, it will be in harmony with the appropriate and orderly development of the district in which it is proposed to be situated and will not be detrimental to the orderly development of the adjacent properties in accordance with the zoning classification of such properties.
   3. That, in addition to the above, in the case of any use located in or directly adjacent to, a residential district:
      a. The location and size of such use, the nature and intensity of operations involved in or conducted in connection therewith, its site layout and its relation to access streets shall be such that both pedestrian and vehicular traffic to and from the use and the assembly of persons in connection therewith will not be hazardous or inconvenient to, or incongruous with, said residential district or conflict with the normal traffic of the neighborhood.
      b. The location and height of buildings, the location, nature and height of walls and fences and nature and extent of landscaping on the site shall be such that the use will not hinder or discourage the appropriate development and use of adjacent land and buildings.
B. Application. In addition to any other requirements in this chapter, each application for a conditional use shall be accompanied by a proposed plan showing the size and location of the lot, the location of all buildings and proposed facilities, including access drives, parking areas and all streets within two-hundred (200) feet of the lot.
C. Public hearing. The Township Board of Supervisors shall not take action on any application for a conditional use approval without first holding a public hearing. Notice shall be provided and the hearing shall be conducted in accordance with the Municipalities Planning Code.

D. Commission action. The Commission shall, within thirty-five (35) days of the date of the public hearing on the application for conditional use approval, take final action to recommend to the Supervisors approval, disapproval or modification for said conditional use and shall so notify the applicant in writing.
E. Effect of conditional use approval. Any use for which a conditional use permit may be granted shall be deemed to be a conforming use in the district in which such use is located, provided that such permit shall be deemed to affect only the lot or portion thereof for which such permit shall have been granted.

ARTICLE XIV, Amendments

§ 150-80. Enactment of Zoning Ordinance amendments.
A. The Board of Supervisors may from time to time amend, supplement or repeal any of the regulations and provisions of this chapter. The procedure for the preparation of a proposed zoning ordinance as set forth in Section 607 of the Pennsylvania Municipalities Planning Code, 53 P.S. § 10607, is hereby declared optional.
B. Before voting on the enactment of an amendment, the Board of Supervisors shall hold a public hearing thereon, pursuant to public notice. In addition, if the proposed amendment involves a Zoning Map change, notice of said public hearing shall be conspicuously posted by the Township at points deemed sufficient by the Township along the perimeter of the tract to notify potentially interested citizens. The affected tract or area shall be posted at least one week prior to the date of the hearing.
C. In the case of an amendment other than that prepared by the Planning Commission, the Board of Supervisors shall submit each such amendment to the Planning Commission at least thirty (30) days prior to the hearing on such proposed amendment to provide the Planning Commission an opportunity to submit recommendations.
D. If after any public hearing held upon an amendment the proposed amendment is changed substantially or is revised to include land previously not affected by it, the Board of Supervisors shall hold another public hearing, pursuant to public notice, before proceeding to vote on the amendment.
E. At least thirty (30) days prior to the public hearing on the amendment by the Board of Supervisors, the Township shall submit the proposed amendment to the county planning agency for recommendations.
F. Within thirty (30) days after enactment, a copy of the amendment to this chapter shall be forwarded to the county planning agency.

§ 150-81. Procedure for Township curative amendments.
A. If the Township determines that this chapter, or any portion hereof, is substantially invalid, it shall take the following actions:
   1. The Township shall declare by formal action this chapter or portions hereof substantially invalid and propose to prepare a curative amendment to overcome such invalidity. Within thirty (30) days of such declaration and proposal, the Board of Supervisors shall:
      a. By resolution make specific findings setting forth the declared invalidity of this chapter, which may include:

(1) References to specific uses which are either not permitted or not permitted in sufficient quantity.
(2) Reference to a class of use or uses which requires revisions.
(3) Reference to this entire chapter which requires revisions.

b. Begin to prepare and consider a curative amendment to this chapter to correct the declared invalidity.

B. Within one-hundred-eighty (180) days from the date of the declaration and proposal, the Township shall enact a curative amendment to validate or reaffirm the validity of this chapter pursuant to the provisions of Section 609 of the Pennsylvania Municipalities Planning Code (hereinafter "MPC"), 53 P.S. § 10609, in order to cure the declared invalidity of this chapter.

C. Upon the initiation of the procedures as set forth in Subsection A, the Board of Supervisors shall not be required to entertain or consider any landowner's curative amendment filed under Section 609.1 of the MPC, 53 P.S. § 10609.1, nor shall the Zoning Hearing Board be required to give a report requested under Section 909.1 or 916.1 of the MPC, 53 P.S. § 10909.1 or 10916.1, subsequent to the declaration and proposal based upon the grounds identical or substantially similar to those specified by the resolution required by Subsection A(1). Upon completion of the procedures set forth in Subsections A and B, no rights to a cure pursuant to the provisions of Sections 609.1 and 916.1 of the MPC, 53 P.S. §§ 10609.1 and 10916.1, shall, from the date of the declaration and proposal, accrue to any landowner on the basis of the substantive validity of this chapter for which there has been a curative amendment pursuant to this section.

D. The Township having utilized the procedures set forth in this section may not again utilize said procedure for a period of thirty-six (36) months following the date of enactment of a curative amendment, or reaffirmation of the validity of this chapter; provided, however, that if after the date of declaration and proposal there is a substantially new duty imposed upon the Township by virtue of a change in statute or by virtue of a Pennsylvania Appellate Court decision, the Township may utilize the provisions of this section to propose a curative amendment to this chapter to fulfill said duty or obligation.

§ 150-82. Procedure for landowner curative amendments.

A. A landowner who desires to challenge on substantive grounds the validity of this chapter or the Zoning Map or any provisions thereof which prohibit or restrict the use or development of land in which he or she has an interest may submit a curative amendment to the Board of Supervisors with a written request that his or her challenge and proposed amendment be heard and decided as provided in Section 916.1 of the Pennsylvania Municipalities Planning Code (hereinafter "MPC"), 53 P.S. § 10916.1. The curative amendment and challenge shall be referred to the Planning Commission and the County Planning Agency as provided in Section 609 and notice of the hearing thereon shall be given as provided in Section 610 and Section 916.1 of the MPC, 53 P.S. §§ 10609, 10610 and 10916.1.

B. The hearing shall be conducted in accordance with Section 908 of the Municipalities Planning Code and all references therein to the Zoning Hearing Board shall, for purposes of this section be references to the Board of Supervisors. If the Township does not accept a landowner's curative amendment brought in accordance with this subsection and a court subsequently rules that the challenge has merit, the court's decision shall not result in a declaration of invalidity for this entire chapter and Zoning Map but only for those provisions which specifically relate to the landowner's curative amendment and challenge.

C. The Board of Supervisors, if it determines that a validity challenge has merit, may accept a landowner's curative amendment, with or without revision, or may adopt an alternate amendment which will cure the challenged defects. The Board of Supervisors shall consider the curative amendments, plans and explanatory material submitted by the landowner and shall also consider:
   1. The impact of the proposal upon roads, sewer facilities, water supplies, schools, and other public service facilities.
   2. If the proposal is for a residential use, the impact of the proposal upon regional housing needs and the effectiveness of the proposal in providing housing units of a type actually available to and affordable by classes of persons otherwise unlawfully excluded by the challenged provisions of this chapter or Zoning Map.
   3. The suitability of the site for the intensity of use proposed by the site's soils, slopes, woodlands, wetlands, floodplains, aquifers, natural resources and other natural features.
   4. The impact of the proposed use on the site's soils, slopes, woodlands, wetlands, floodplains, natural resources and natural features, the degree to which these are protected or destroyed, the tolerance of the resources to development and any adverse environmental impacts.
   5. The impact of the proposal on the preservation of agriculture and other land uses which are essential to public health and welfare.

ARTICLE XV, Administration and Enforcement

§ 150-83. Appointment and powers of Zoning Officer.

A. For the administration of this chapter, a Zoning Officer, who shall not hold any elective office in the Township, shall be appointed.
B. The Zoning Officer shall meet the qualifications established by the Township and shall be able to demonstrate to the satisfaction of the Township a working knowledge of municipal zoning.
C. The Zoning Officer shall administer this chapter in accordance with its literal terms and shall not have the power to permit any construction or any use or change of use which does not conform to this chapter.
D. The Zoning Officer is hereby authorized to institute civil enforcement proceedings as a means of enforcement when acting within the scope of his or her employment.
E. The Zoning Officer or his or her duly authorized assistant(s) shall have the right to enter any building or enter upon any land at any reasonable hour as necessary in the execution of his or her duties, provided that:
   1. The Zoning Officer shall notify the landowner and tenant before conducting any inspections.
   2. The Zoning Officer or his or her duly authorized assistant(s) shall display identification signed by the Township Supervisors upon commencing an inspection.
   3. Inspections shall be commenced in the presence of the landowner or his or her representative or tenant.
F. The Zoning Officer shall maintain files, open to the public, of all applications for certificates of occupancy and permits along with plans submitted therewith as well as final certificates and permits.

G. The Zoning Officer shall also maintain records, open to the public, of every complaint of a violation of the provisions of this chapter as well as action taken as a result of such complaint.
H. The Zoning Officer shall submit to the Township Supervisors for insertion in the Supervisors' minutes, a written report summarizing for the month all land use permits issued by him or her as well as complaints of violations and action taken as a result of such complaints.

§ 150-84. Permits.

A. Land Use Permits
   1. No building or structure in excess of one-hundred (100) square feet, in any district, shall be placed, erected or structurally altered without a land use permit duly issued upon application to the Township. No land use permit shall be issued unless the proposed construction or use is in full conformity with all provisions of this chapter and all other Township ordinances. Any land use permit issued in violation of the provisions of this chapter shall be null and void and of no effect, and any work undertaken or use established pursuant to any such permit shall be unlawful.
   2. No land use permits shall be issued for the construction or alteration of any building upon a lot without legal access to a street or highway.
   3. No land use permit shall be issued for a structure in any district where such structure or use is allowed only by approval of the Zoning Hearing Board unless and until such approval has been duly granted by the Zoning Hearing Board.
   4. The Township shall, within fifteen (15) days after the filing of a complete and properly prepared application, either issue or deny a land use permit. If a land use permit is denied, the Township shall state in writing to the applicant the reasons for such denial.
   5. A hand sketch of the property shall be submitted showing the location of all buildings and drives on the property, the property's road frontage and the location of the proposed improvement. Dimensions from the side and rear property line to the closest point of the improvement must be shown as well as the distance from the center of the road(s) to the closest point of the improvement. Such drawing is not needed if the improvement is within the existing footprint of the building or structure.
   6. A copy of the water, sewer, or septic permit shall be submitted along with such land use application prior to issuance.
   7. All Township land use permits issued pursuant to this article shall be valid for 18 months. Land use permits for construction in excess of one million dollars ($1, 000,000) shall be valid for thirty-six (36) months. Two (2) extensions may be granted, each for an additional eighteen (18) or thirty-six (36) months determined by the original construction cost as long as reasonable cause is shown. Extension requests shall be made in writing.
   8. An as built survey shall be completed for all new residential dwellings, new commercial structures or industrial structures. Such surveys shall show all information as required by the Township and be signed and sealed by a surveyor licensed in the state of Pennsylvania.
   9. Land Development Plans.
      a. Any developer of a single tract of land for any of the following reasons shall be required to present a land development plan for review and approval by Antrim Township:
         (1) Multifamily residential purposes.

(2) Commercial.
(3) Industrial.
(4) Agricultural buildings of ten thousand (10,000) square feet or more.
(5) Changing, altering or modifying a dwelling, single-family detached (house), into a dwelling, multifamily or dwelling, single-family semidetached (duplex) or dwelling, single-family attached (townhouse) or dwelling, group.

b. The land development plan shall be prepared in accordance with all subdivision/land development requirements for a final plan. When a land development plan is required, the review time for the developer's fully completed land use permit application shall commence after Board of Supervisors final action on the land development plan. Land development plans shall be reviewed in accordance with the Subdivision/ Land development Chapter.

B. Zoning Permit.
1. No use shall commence within the Township without first obtaining a Zoning Permit to ensure that such use is permitted in that zoning district and that such location complies with all applicable regulations for such use.
2. Any change of use on a property or within a structure requires a zoning permit to be obtained before any change shall occur. Such change shall comply with all regulations of the Township.
3. A hand sketch of the property shall be submitted upon request from the Township showing at a minimum the location of all buildings, parking areas including the number of parking spaces, drives on the property, the property's road frontage and the location of the proposed improvement.
4. All fees that may apply to such use or change of use shall be paid in full prior to issuance of the Zoning Permit.
5. Any improvements determined to be needed for such use to comply with regulations shall obtain proper approvals before the Zoning Permit can be issued.
6. Any Zoning Permit issued in violation of the provisions of this chapter shall be null and void and of no effect, and any work undertaken or use established pursuant to any such permit shall be unlawful.

§ 150-85. Fees.

A. Any individual or other entity requesting a zoning change shall be required to pay any and all Township fees involved with the zoning change request, including, but not limited to, advertising, attorney, engineer, stenographer, copying, time spent by Township staff, etc.
B. The Board of Supervisors shall have the right to establish other fees in addition to the fees described above to offset the costs of enforcing or administering this chapter.

§ 150-86. Enforcement notice.

A. If it appears to the Township that a violation of this chapter has occurred, the Township shall initiate enforcement proceedings by sending an enforcement notice as provided in this section.
B. The enforcement notice shall be sent to the owner of record of the parcel on which the violation has occurred, to any person who has filed a written request to receive enforcement notices regarding that parcel and to any other person requested in writing by the owner of record.

C. An enforcement notice shall state at least the following:
   1. The name of the owner of record and any other person against whom the Township intends to take action.
   2. The location of the property in violation.
   3. The specific violation with a description of the requirements which have not been met, citing in each instance the applicable provisions of this chapter.
   4. The date before which the steps for compliance must be commenced and the date before which the steps must be completed.
   5. That the recipient of the notice has the right to appeal to the Zoning Hearing Board within a period of ten (10) days.
   6. That failure to comply with the notice within the time specified, unless extended by appeal to the Zoning Hearing Board, constitutes a violation, with possible sanctions clearly described.

§ 150-87. Causes of action.

In case any building, structure, landscaping or land is or is proposed to be erected, constructed, reconstructed, altered, converted, maintained or used in violation of this chapter, the Board of Supervisors or, with the approval of the Board of Supervisors, an officer of the Township, or any aggrieved owner or tenant of real property who shows that his or her property or person will be substantially affected by the alleged violation, in addition to other remedies may institute any appropriate action or proceeding to prevent, restrain, correct or abate such building, structure, landscaping or land or to prevent, in or about such premises, any act, conduct, business or use constituting a violation. When any such action is instituted by a landowner or tenant, notice of that action shall be served upon the Township at least thirty (30) days prior to the time the action is begun by serving a copy of the complaint on the Board of Supervisors. No such action may be maintained until such notice has been given.

§ 150-88. Violations and penalties.

A. Any person, partnership or corporation who or which has violated or permitted the violation of the provisions of this chapter shall, upon being found liable therefore in a civil enforcement proceeding commenced by the Township, pay a judgment of not more than five-hundred dollars ($500) plus all court costs, including reasonable attorneys' fees, incurred by the Township as a result thereof. No judgment shall commence or be imposed, levied or payable until the date of the determination of a violation by the District Justice. If the defendant neither pays nor timely appeals the judgment, the Township may enforce the judgment pursuant to the applicable rules of civil procedure. Each day that a violation continues shall constitute a separate violation, unless the District Justice determining that there has been a violation further determines that there was a good faith basis for the person, partnership or corporation violating this chapter to have believed that there was no such violation, in which event there shall be deemed to have been only one such violation until the fifth day following the date of the determination of a violation by the District Justice and thereafter each day that a violation continues shall constitute a separate violation.
B. The Court of Common Pleas, upon petition, may grant an order of stay, upon cause shown, tolling the per diem fine pending a final adjudication of the violation and judgment.

C. Nothing contained in this section shall be construed or interpreted to grant to any person or entity other than the Township the right to commence any action for enforcement pursuant to this section.
D. District Justices shall have initial jurisdiction over proceedings brought under this section.

SECTION 6 - Effective Date. This Ordinance shall become effective in accordance with the law.

SECTION 7 – Repealer and Savings Clause. All other Township ordinances or parts of other ordinances in conflict herewith, are hereby repealed. Nothing in this ordinance hereby adopted shall be construed to affect any suit or proceedings in any court, or any rights acquired, or liability incurred, or any cause or causes of action or acquired or existing, under the ordinances hereby repealed, nor shall any just or legal right or remedy of any character be lost, impaired or affected by the enactment of this ordinance.

SECTION 8 - Severability. If any chapter, article, section, or provision of this Ordinance should be decided by the Courts to be unconstitutional or invalid, such decision shall not affect the validity of this Ordinance as a whole or any part thereof other than the part so decided to be unconstitutional or invalid.

ENACTED by the Board of Supervisors of the Township of Antrim at its regular meeting the 25 day of November, 2014

Attest: SUPERVISORS OF ANTRIM TOWNSHIP

Jennifer Becknell

Jennifer Becknell, Secretary

Pat Heraty, Chairman